How to Build
or Remodel
Energy Efficient
Homes and
Businesses

SAN GABRIEL VALLEY VOLUNTARY GREEN BUILDING HANDBOOK

This Voluntary Code was produced by the collaborative effort of Southern California Edison, San Gabriel Valley Council of Governments, Terra Nova Planning & Research and Interactive Design Corporation

TABLE OF CONTENTS

INTRODUCTION

This Handbook has been prepared to help anyone who wants to build or remodel a home or business to be more energy efficient. It is designed to help residents, homeowners, building owners, designers, architects, contractors, developers and building officials determine how they can design their project to include 'green building' techniques and products.

"Green building" is a comprehensive approach to design, construct, renovate, and operate buildings to increase their energy efficiency, comfort, and longevity.

The central objective of green buildings is to use resources, including building materials, electricity, and water, efficiently. Green buildings tend to have better indoor air quality, as well as be less expensive to operate and maintain compared to their traditional counterparts. Green building strategies save money, improve the profit margin for local businesses, and free up dollars which would otherwise have been spent on utilities. Finally, green buildings enhance the local environment and quality of life, and increase the livability of the community.

BACKGROUND

Buildings use energy, water and raw materials, and they generate wastewater, refuse (solid waste), and demolition materials. The production and use of materials to build a building as well as the energy to operate it result in the emission of air pollutants and greenhouse gases. Minimizing the use of these resources through green building principles helps reduce impacts on our environment and promotes sustainability.

While green building or sustainable building can be described in a number of ways, the following are fundamental principles that should be considered when designing a new building or retrofitting an existing building:

- **Site integration**: Choose the site wisely, orient the building for drainage, sun and wind
- **Passive design features**: Take advantage of solar exposure, thermal mass and natural ventilation
- **Resources**: Use water, natural gas, electricity and land efficiently
- **Materials and building products:** Select items that are non-toxic and have recycled content
- **Indoor air quality**: Avoid toxic products and utilize natural ventilation
- **Appliances and equipment:** Select those that are highly efficient
- **Operation and maintenance:** Perform recommended maintenance and use non-toxic materials

introduction

WHO CAN TAKE ADVANTAGE

If you are building or remodeling a home or commercial property, the techniques and products in this Handbook are meant to help you build a more energy efficient, environmentally friendly structure. This Handbook is intended to be used by a wide audience:

- Homeowners
- Building owners
- Renters, Lessees, and Tenants
- Developers
- Architects and designers
- Builders, contractors and building trades
- Planners, practitioners and city officials

The goal of this Handbook is to provide and organize information about green building in an easy-to- understand format.

PURPOSE OF THIS HANDBOOK

This Handbook is intended to provide guidance to those wishing to increase the energy efficiency of their home or workplace. This Handbook goes beyond energy efficiency to address other aspects of the built environment such as site conditions, shade and indoor air quality. Green building concepts strive to work in concert with the natural environment. Orientation of buildings should take into consideration the path of the sun to shade during the summer and utilize the sun as light and heat source during the winter. This is especially valuable in benign climates such as the San Gabriel Valley. Likewise control and infiltration of rain water is important to limit erosion and optimize on-site use of water, therefore flow lines and impermeable paving should be carefully planned.

A WORD (or two) ABOUT CODES

Whether your project is a new building or a remodel of an existing structure, you will need a building permit, AND California building energy efficiency standards will apply. Understanding the principles of green building and the process of review and permitting can be difficult, but the goal is simple - reduce energy consumption and make healthier buildings.

This Handbook does NOT take the place of the Energy Efficiency and Green Building Sections of the California Building Code (CBC), Part II of the California Green Standards Code (CALGreen), or Title 24 Part 6 of the California Energy Code (CEC).

introduction

"Title 24" is the term commonly used to describe energy regulations for buildings in California. Since 1978 design professionals, contractors and building owners have had to comply with the energy efficiency measures contained in Part 6 of Title 24. The requirements have been revised numerous times during the past thirty years, and they will continue to be revised to reach the ultimate goal of "net zero."

Of course, a building constructed today is much more efficient than one constructed twenty or thirty years ago. The minimum goal of the San Gabriel Valley Voluntary Green Building Program is to have buildings exceed or surpass TODAY'S mandated energy performance by 15% (per Title 24 Part 6 calculations 2013).

Historically, to demonstrate that a building meets California energy efficiency standards, a design professional or energy consultant would use software to compare the energy efficiency of a proposed building with a theoretical "baseline energy budget." Based upon the design of the building, the design professional would select the various elements within a building (window types and sizes, glazing type, wall area and insulation, roofing, HVAC equipment, etc.) These values would be entered with the Climate Zone applicable (Zone 9 for San Gabriel Valley), and the software estimates the theoretical annual energy usage for the building on the specific site in the specific Climate Zone. If the projected energy usage was less than the "baseline," the building would "comply," and the percentage less than the “baseline” would determine how much the building “exceeds” or surpasses the Title 24 minimum.

In 2010 and again in 2013, Title 24 was amended to include "green building" requirements. These requirements are contained in Part 11 of Title 24, and are called the "California Green Standards Code (CALGreen)." Part 11 views the entire process of design and construction from a broader perspective and includes issues dealing with construction waste, recycled materials, and water usage. Virtually any new construction, remodel, alteration or addition to an existing structure must comply with both Part 6 (CEC) and Part 11 (CALGreen) of Title 24. This Handbook supplements those requirements, but does not replace them.

HOW TO USE THIS HANDBOOK

This Handbook is organized into the following Chapters:

- **Chapter 1**: The Practical Approach, "What Should I Do Now?"
- **Chapter 2:** The Informative Approach, Green Principles Illustrated

introduction

The first task in using this Handbook is to identify the building type you are considering - for example, your home, an apartment building or a small commercial building. Each chapter contains information specific to the building type: residential or commercial buildings (for ease of use, all non-residential buildings are termed commercial). Information for residential buildings is subdivided into single family and multi-family structures. The residential and commercial sections are further broken out into existing buildings (retrofit) and new buildings. Once you've identified your building type you can go directly to the appropriate section.

The next step is to browse through the basic concepts in Chapter One ("What should I do now?"). This will provide an overview of issues that a more fully discussed in Chapter Two. You can then go to Chapter Two (The Practical Approach) to the section related to your building type and browse green building concepts. This will allow you to select options that intrigue you and will be most beneficial to your needs. This process of familiarizing yourself with the concepts will enhance the discussion with your designer, architect or contractor about these options.

In order to to reach the goals of this Green Building Program (saving at least 15% more energy than Code minimum, you will need to incorporate combinations of energy efficiency-related building techniques and products. The most effective way to accomplish this is to work with your designer to evaluate different combinations of windows, insulation, HVAC SEER rating and on-site inspections. This is a back- and-forth process that can be "modeled" using the software related to Title 24 part 6. In addition to these measurable items, there are other design issues that can save energy and money. Your designer or contractor can help you select the items you need to optimize cost, energy saving and comfort.

OVERVIEW OF CHAPTERS

CHAPTER ONE: The Practical Approach, provides information on how to use this Green Building Handbook and explains who can use it, what it can be used for and how to implement it. This chapter provides a quick overview of practical steps to improve energy-efficiency and save money. Chapter One also provides a glossary of terms for easy reference and graphic images that explain green building concepts. Chapter One asks "What should I do now?" and provides basic answers for each of the building types addressed.

CHAPTER TWO: The Informative Approach, introduces the important concepts that make a building more or less energy efficient. How the building is oriented to the sun affects energy usage, how increasing the heat resistance of the building envelope can reduce HVAC demands, and how passive design features can save money are explained and illustrated in Chapter Two. In addition, the green building options that are used to evaluate and calculate energy savings are presented in this Chapter. The intent of this Chapter is to give the homeowner, tenant, designer, builder or developer enough information about the various elements of green building to make informed and effective decisions about their project.

introduction

Online Version

If viewing the Green Building Program and Handbook electronically, direct links to each building type (Chapter Two) are provided. Simply click on the desired sectionto be routed to the appropriate discussion.

INSPECTIONS

There is great value to have third party verification of the actual installation of various measures. Both the California Energy Code and this Handbook place high value on third party verification of four major elements: insulation installation, leakage through air conditioning ducts, leaks through gaps and cracks in the building envelope, and HVAC equipment. The first three require careful attention to details and connections, and not infrequently do not perform as designed. By inspecting them before they are closed up (so errors can be corrected), the overall performance of the building is greatly enhanced. Every process of manufacturing and fabrication requires quality control; you can think of third-party verification as construction quality control.

WHERE ELSE TO LOOK FOR INFORMATION

Energy conservation is on everyone's mind, but it isn't always easy to find your way around all the programs and websites available through utilities, various government agencies and private organizations. Below are links to some of these organizations that are particularly relevant to the San Gabriel Valley. By no means is the list complete, but it will get you started looking for more information – or the same information presented differently. The first links are Federal Programs, then State, then non-profit and, finally, industry.

California Green Building Standards Code (CG)
http://www.bsc.ca.gov/Home/CALGreen.aspx

United States Green Building Council (LEED)
http://www.usgbc.org

Build It Green (GPR)
http://www.builditgreen.org/greenpoint-rated/

California State Energy Code (CEC), The California Energy Commission
http://www.energy.ca.gov/title24/ http://www.energy.ca.gov/HERS/index.html

"ENERGY EFFICIENT" BENEFITS:

Learn about the benefits of energy upgrades. Search for rebate information, find a contractor and read about specific news in your town.

Southern California Edison
http://www.sce.com

California Energy Upgrade
https://energyupgradeca.org/

Department of Energy
http://energy.gov/

U.S. Environmental Protection Agency
http://www.epa.gov/greeningepa/index.htm

introduction

ENERGY-SAVING TIPS:

These links provide tips on saving energy and recommend products to use for a remodel or new construction. You can also verify if your "green" upgrades meet today's standards

Energy Star
http://www.energystar.gov/

Cool Roof Rating Council
http://coolroofs.org/index.html

National Fenestration Rating Council
http://nfrc.org/

American Society of Heating, Refrigerating & Air-Conditioning Engineers
http://ashrae.org/

Lawrence Berkeley National Laboratory
http://www.lbl.gov/

CHAPTER ONE

What should I do now?

CHAPTER ONE provides a quick overview of practical steps to improve energy-efficiency and save money. CHAPTER ONE asks "What should I do now?" and provides basic answers for each of the building types addressed in the Voluntary Green Building Handbook:

- Single family homes
- Multi-family apartments
- Commerical buildings

CHAPTER ONE also includes a simple glossary of terms commonly used in energy-efficiency literature and the green building design and construction industry.

NO COST OR LOW COST IMPROVEMENTS

The following suggestions are either low cost or no cost options that everyone should consider.

1. **Seal Leaks**: Every opening in a building (doors, windows, pipes and electrical boxes) are pathways for conditioned air to escape. Caulking, sealants, spray foam and weather-stripping eliminate air leaks and help to regulate the temperature differential between indoors and outdoors.
2. **Replace light bulbs**: The use of compact fluorescent and LED (light-emitting diodes) light bulbs reduces energy costs while providing the same level of illumination. Most compact fluorescent and LED lights are dimmable to give even greater control of lighting.
3. **Turn off lights and appliances and shut off power source**: Turning off lights and appliances when not in use is a quick and easy way to save energy. The use of power strips can further reduce energy use by avoiding the ghost effect caused by unused electronics. Some mechanisms, such as cable TV boxes, utilize almost as much power when in the off position as when the TV is on.
4. **Automate the thermostat, lights and vending machines**: Programmable systems allow for automation so that energy is conserved during non-business hours or during low use.
5. **Optimize heat and light from the sun**: Natural daylight is free, is healthier and is abundant. Controlling for glare, windows and skylights can provide adequate light for many activities. Open curtains, shades and blinds on south and west facing windows for heat and light, or close them to keep cooler.
6. **A building is a living system**: If you plant shade trees, install window shades and adjust them to control the sun, and open and close windows to take advantage of the natural flow of air your building will be more comfortable and save money spent on electricity.

GLOSSARY

COOL ROOFING requires high solar reflectance and emissivity.

REFLECTANCE measures how much of sunlight (visible, infrared and ultraviolet) is reflected; > 1.75

EMISSIVITY measures how quickly heat is given up by a material.

INSULATION slows the transfer of heat. The thermal resistance of a material is measured in "R value"; higher is better. In our valley climate R-38 is good in the attic and R-19 in the walls.

WINDOWS are "transparent" in more ways than one: they let light in; they also let heat in or out. How well they perform in controlling heat, is measured in three ways: solar heat gain (how much of the sun's energy gets through the glass to heat up the interior); conductance (how much of the heat passes in or out through the entire window assembly); and infiltration (how much air leaks through the assembly.)

SOLAR HEAT GAIN COEFFICIENT (SHGC) is a percentage of the sun's energy that passes through the glass to heat up the interior surfaces. Less is better in the San Gabriel Valley and pretty much all of Southern California. The minimum allowed is 25%, which is listed as SHGC 0.25.

U-FACTOR measures how easily heat passes through the entire window assembly – frame and glass. A window with high conductance feels hot on a hot day, whether or not in the sun. Windows are rated by their U-factor, and the minimum in San Gabriel Valley is 0.30. A rating of 0.25 lets less heat through, but in a mild climate is generally not worth the added cost.

INFILTRATION measures how leaky a window is. Today's windows are tight, and this influences the need for ventilation in a building.

VENTILATION is necessary for a healthy interior environment referred to as "indoor air quality." Because today's windows and construction techniques are higher quality than in the past, buildings are increasingly "tight." They don't leak much, so fresh air has to be brought in when the heating or air conditioning is running. In the current code, a mechanical means of drawing fresh air in is needed. Either with exhaust fans in homes or in a commercial building, the HVAC system must have a source of outside air to mix with the already-conditioned, and possibly stale, indoor air.

AIR CONDITIONING is one of the largest energy users in a building, systems are getting more efficient nearly every year. The code minimum is now 13 SEER and 11 SEER; higher efficiency units can get upwards of 20 SEER, and are linked to variable speed fans and compressors.

PASSIVE strategies do not rely upon equipment or electricity; they use natural elements to modulate the interior environment.

THERMAL CHIMNEY EFFECT: opening windows in high spaces and near the floor allows hot air to escape and be replaced by cooler air by the natural process that hot air rises.

SOLAR CONTROL: controlling how the sun enters or is blocked from entering a building is the most important of passive strategies. During the winter, letting the sun heat up a tile or concrete floor will be a source of radiant heat long after sundown. Likewise, to keep a room cool in the summer, block the sun. Concrete and tile floors will remain closer to the year-round temperature of the earth (58-62 degrees) and thus absorb heat from the air and other surfaces.

CHAPTER TWO

GREEN PRINCIPLES ILLUSTRATED

the informative approach

CHAPTER TWO is the informational part of this Green Building Handbook. In this Chapter the principles of energy efficiency and resource management are illustrated and explained in everyday language. This Chapter is geared toward property owners and interested citizens more than to professionals.

The principles are organized from the outside – in. Issues related to the site and existing conditions are addressed first, then the envelope of the building, then equipment and systems, and, finally, passive strategies. Each page illustrates two or three related principles.

Principles of energy efficiency are illustrated for both remodel and new construction and for all three building types (single family residences, multi-family buildings and commercial buildings), and are coded by color with a lighter shade for remodel, and darker for new.

At the beginning of each building type is a sheet titled "What Should I Do Now?" which presents simple steps to consider for remodel projects, but this information can also be relevant to new projects. The ideas are organized from low cost to higher cost, and are steps to take to reduce the cooling load before upgrading the equipment.

"A word about Codes"

Many of the steps to improve energy efficiency in a building will require a building permit including compliance with the California Energy Code energy efficiency standards. "Title 24" is the catch-all phrase commonly used when referring to the energy efficiency requirements in the building code. The introductions to this Handbook explain the intricacies of "energy codes."

BUILDING TYPES

SINGLE FAMILY
REMODEL
NEW

MULTI-FAMILY
REMODEL
NEW

COMMERCIAL
REMODEL
NEW

WHAT SHOULD I DO NOW
FOR MY HOME?

SINGLE FAMILY NEW & REMODEL

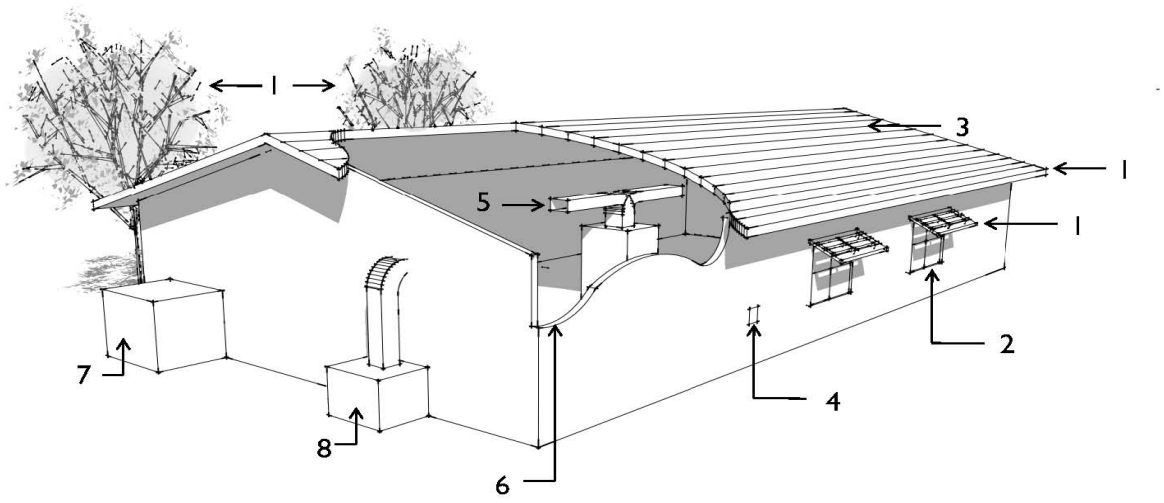

1 SHADE
Add trellis, awnings, trees, lattice/vines.

2 AIR SEAL
Seal gaps and cracks with foam and sealants.

3 COOL ROOF
Add coating on existing roofing or install a "cool roof" system.

4 WINDOWS
Add film to existing single pane windows or replace with high-performance windows.

5 DUCT SEAL
Tape existing pipes and ducts to seal leaks.

6 ENVELOPE INSULATION
Add insulation in the attic and a radiant barrier.

7 HVAC ≥ SEER 13
Replace AC unit with higher efficiency rating.

8 EVAPORATIVE COOLER
Add a cooler to existing or new buildings for energy efficient ventilation.

residential

SUSTAINABLE DESIGN OPTIONS

TO CONSIDER FOR

EXISTING HOME REMODEL

site & existing condition

SITE CONSIDERATIONS

START FROM THE OUTSIDE

AROUND THE HOME

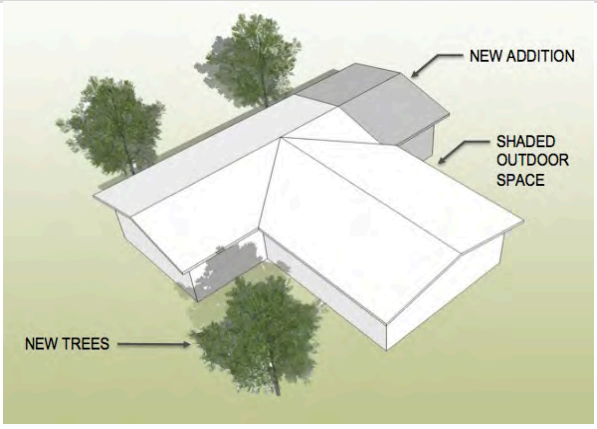

START OUTSIDE
When considering how to add to your home, use the new addition to enhance the quality of outdoor areas with new shade. Consider where new trees would be valuable for shade, how the addition itself can shade currently exposed areas, and how the orientation of the addition will limit windows and long walls facing west.

Consider removing hardscape that is not necessary. Concrete patios and walkways may become additional source of unwanted heat.

FIX WHAT'S BROKEN

As part of preparing to remodel and/or expand, find out how the home is already working – test the ducts to see how badly they leak, perhaps do a "blower door" test to see how much air leaks into (or out of) the house through cracks, electrical outlets, windows and doors. While the workers are doing the main remodel, some remedial work such as duct and "air sealing" may be warranted and cost effective.

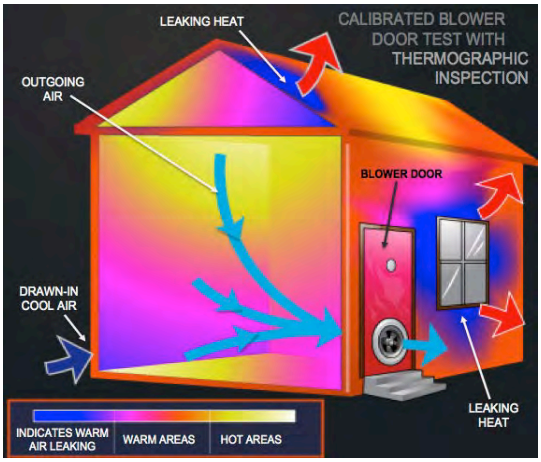

BLOWER DOOR TEST

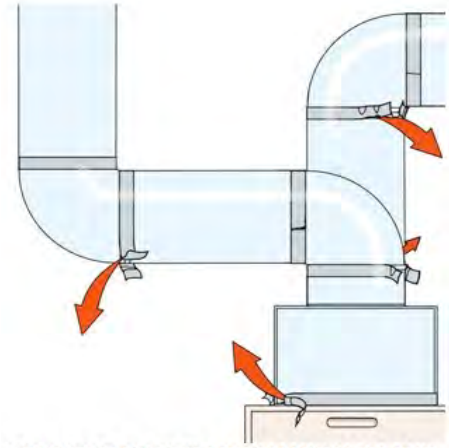

CONNECT DUCTS MECHANICALLY AND SEAL WITH MASTIC

A duct leakage test is now part of the Energy Code requirements in most improvement cases. Tests help ensure the work is done properly.

KEEP UNWANTED HEAT OUTSIDE

the envelope

ROOF & ATTIC

ROOF ASSEMBLY

ROOF
Heat gain through the roof is the largest single load the HVAC system has to counteract. Because the roof is exposed to the sun all day long the whole assembly quickly gets saturated with heat, and it continues to transfer heat inside during the night.

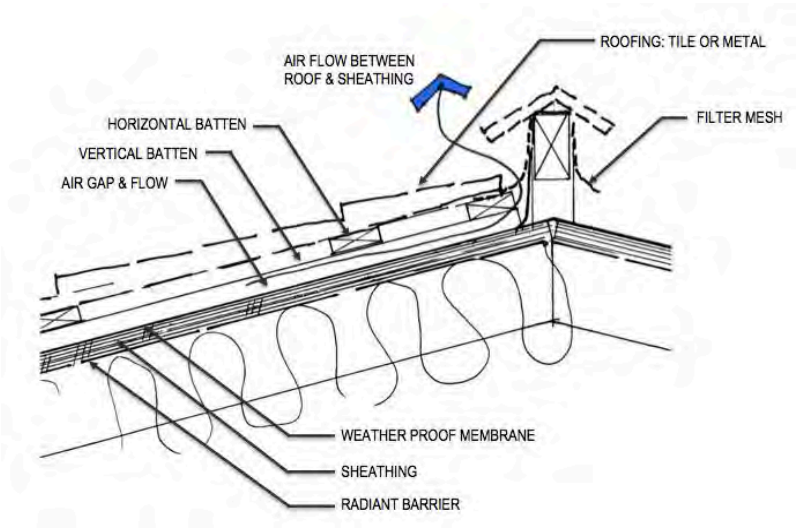

Re-roofing should accomplish two objectives: reflect solar radiant heat and resist heat transfer. "Cool roof" systems and radiant barriers reflect heat from radiation. Insulation increases the resistance to heat transfer, and rigid insulation on top of the existing sheathing keeps heat from penetrating the roof structure or attic insulation.

A "ventilated" roof system accomplishes all of these objectives.

A cool roof may be required by the Energy Code depending on roof slope and other conditions. Check the Energy Code for requirements and exceptions.

ATTIC COOLING

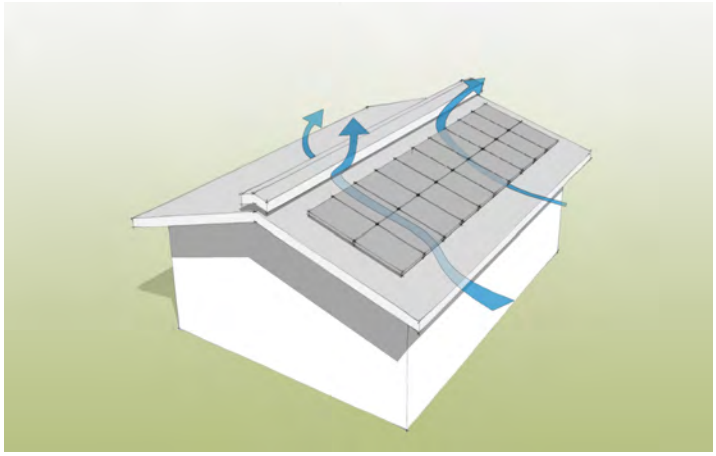

ATTIC
Most older homes often have minimal insulation installed in the attic. Adding more insulation is a good investment, but this should be combined with improving airflow through the attic and installation of a radiant barrier where possible. When remodeling, R-19 insulation in the roof is the minimum required by the Energy Code.

The temperature in closed attics can reach 120 degrees. Ventilation requires inlets and outlets, and relief vents must be added low and high to take advantage of convection ventilation. Adding a solar powered exhaust fan without adding intake vents will not work. If the home has an evaporative cooler, adding relief vents in the ceiling will exhaust the cooled air up through the attic and out attic vents. The ceiling vents must be insulated.

At the same time you add insulation, seal around all recessed lights and ceiling junction boxes.

DESIGN THE ROOF TO REDUCE HEAT

the envelope

WINDOWS & WALLS

KEEP THE SUN OUT

WINDOW ASSEMBLY

WINDOWS
In homes built before 1978, windows are energy sieves -- not only are the frames highly conductive (aluminum or steel), the glazing is probably single pane, the glass is clear (no Low-e coating), the weatherstripping has deteriorated, and even the connection to the surrounding wall material may have cracks. At a minimum, shade windows with trees or awnings.

Replacing windows is relatively simple and not disruptive (the new frames fit within and are attached to the existing frames), but it can be costly. A full-house replacement program should be tailored so that windows facing east, south or west have better SHGC than north-facing windows. Replacement windows may require tempered glass based upon current codes requirements.

An interim approach is to add film to the inside of the glass on windows that get direct sun. The film will reflect a considerable amount of solar heat gain, but heat will still come through cracks and the hot glass. Therefore, all cracks should be sealed.

When replacing windows, check the Energy Code for minimum requirements.

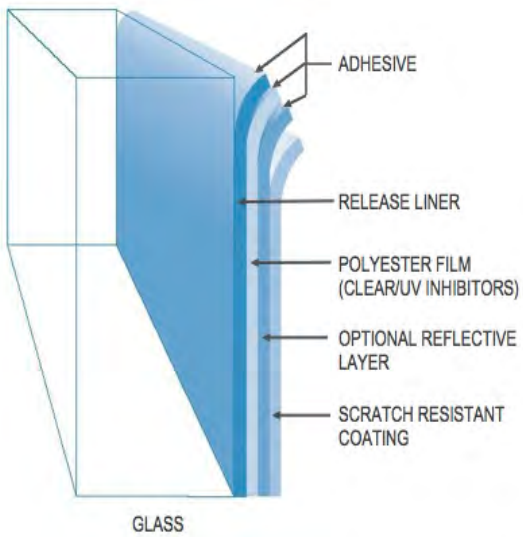

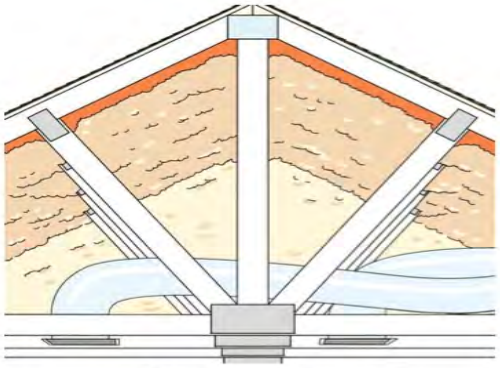

INSULATED ROOF

INSULATED WALLS

INSULATION

WALLS
In most homes built before 1978 the walls are not well insulated. All efforts to increase the insulation values to existing walls are costly and disruptive.

Planting shade trees, creating trellises or living walls and painting the walls a light color cost little and will reduce the heat build-up from solar radiation.

A ventilated wall system for a blank west-facing wall may be an aesthetic as well as energy efficient approach.

If you are considering a large remodel project that will improve the architectual style, adding rigid insulation on the outside and/or adding batt insulation between studs will reduce heat transfer.

There are minimum values to meet according to the Energy Code. However, if you are already adding insulation, increase the insulation values to fill all possible space avilable in the framing area. The additional cost of material is minimal and the labor is the same, especially on the roof. Check the Energy Code for minimum insulation values for improvements when remodeling: R-19 on the roof, and R-11 in the walls.

passive strategies & equipment

DAYLIGHTING STRATEGIES

CONTROL HOW DAYLIGHT ENTERS THE BUILDING...

BALANCE DAYLIGHT

DAYLIGHTING & VENTILATION
Self-flashed tubular skylights make it relatively easy to bring daylight into dark interior rooms or into large rooms where glare is a problem because of large expanses of glass on only one wall. Skylights can balance the distribution of natural light and reduce artificial light during the day.

In some cases, operable skylights can provide daylight and a way to naturally ventilate high volume spaces using natural flow of hot air upward. Opening the skylights at night can provide "night purging" in areas without cross ventilation.

Check that the sizes of the skylights and their values meet the requirements of the Energy Code.

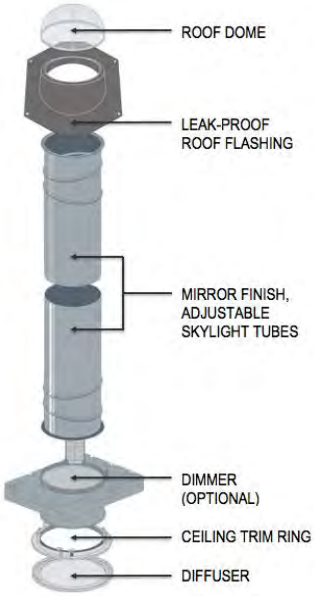

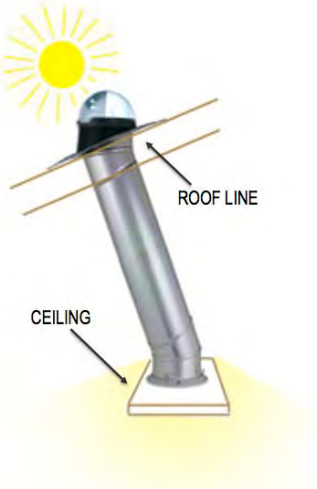

VENTILATION AND THERMAL MASS

For five months a year, natural ventilation is an essential part of indoor comfort and reducing energy use. Cross ventilation through windows is the easiest path, but the thermal chimney effect works for homes that may not have adequate or appropriate window placement. By replacing existing fixed windows with operable windows and adding house fans in the attic to pull the air up, natural ventilation for greater comfort is achieved.

Thermal mass is the ability to absorb heat and release it over time. Concrete and/or tile floors remain cold because they are in contact with the earth. Still, during the day they absorb heat. At night as fresh, cooler air blows across, the floor releases its heat. This is night purging.

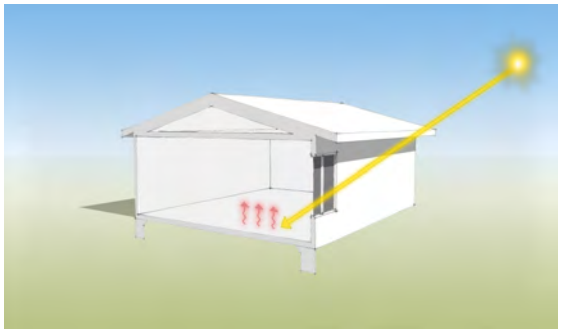

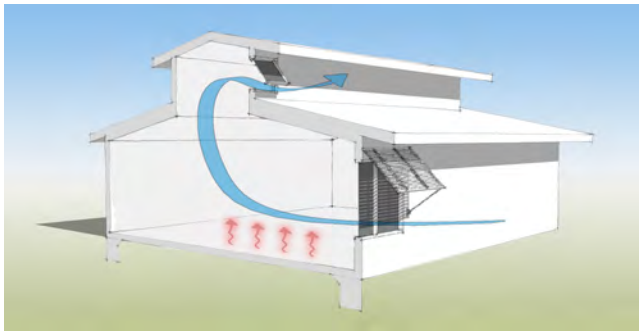

USE DESIGN TO CONTROL DAYLIGHT

the equipment

EQUIPMENT

AIR CONDITIONING

EQUIPMENT
Upgrading the existing home's thermal performance (shade trees, roof, attic, walls and windows) will significantly reduce the cooling load. Doing a careful room-by-room cooling load calculation may mean a smaller HVAC system is needed (e.g. 3-ton vs. 4-ton). This is called "right sizing."

The Energy Code has requirements and guidance for additional testings required when working on such equipment to ensure the equipment was installed correctly. Mechanical replacement is a major investment. Checks and balances help to get the return on investment.

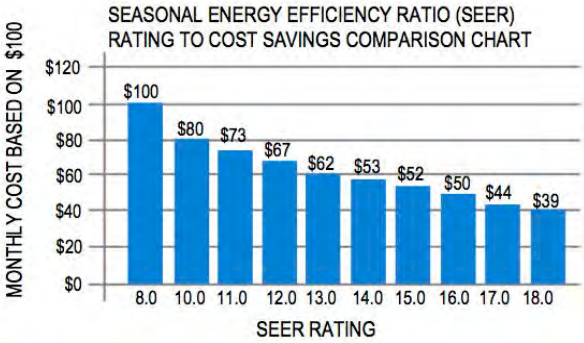

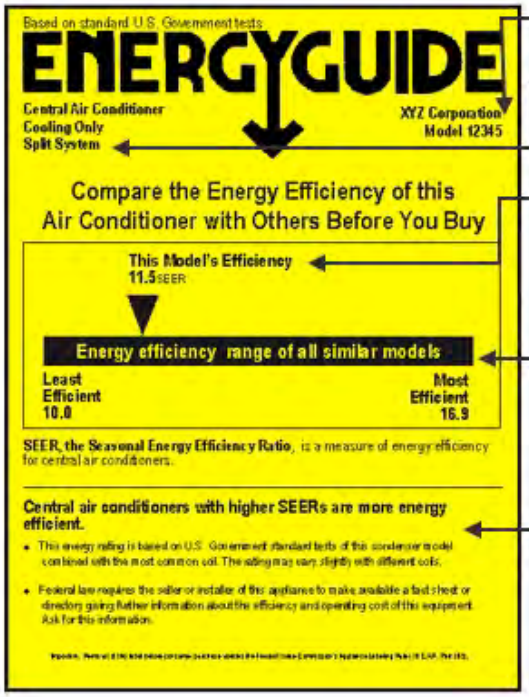

MANUFACTURER & MODEL NUMBER

INFORMATION ABOUT FEATURES, CAPACITY & SIZE HELPS YOU COMPARE BRANDS.

THE ENERGY EFFICIENCY RATING FOR THE PRODUCT. THE HIGHER THE NUMBER, THE MORE ENERGY-EFFICIENT THEPRODUCT AND THE LESS IT COSTS TO RUN.

THE RANGE OF RATINGS FOR SIMILAR MODELS, FROM LESS EFFICIENT TO MORE EFFICIENT. THIS SCALE SHOWS HOW A PARTICULAR MODEL MEASURES UP TO THE COMPETITION.

IMPORTANT INFORMATION ON ENERGY USE & OPERATING COSTS IS PUBLISHED IN FACT SHEETS & PRODUCT DIRECTORIES. INSTALLERS & CONTRACTORS ARE REQUIRED BY LAW TO PROVIDE THESE TO YOU.

USE THE "RIGHT SIZE" EQUIPMENT

SUSTAINABLE DESIGN OPTIONS
TO CONSIDER FOR
NEW HOME

site & building form

SITE CONSIDERATIONS

START FROM THE OUTSIDE

How the home sits on the lot is the first crucial decision.

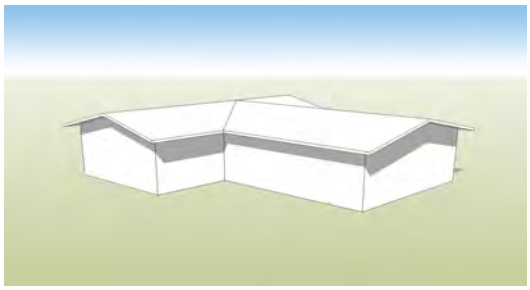

ORIENTATION: The western exposure may have the best view, but it is also the most severe exposure for solar radiation (heat from sunlight). Limiting western exposure by careful placement and sizing of windows, and orienting the home so long walls face north and south are decisions that can be made at the outset, and do not cost money.

VIEWS: You may have beautiful views to the south and west, but large, unprotected expanses of glass are brutal heat gainers. Consider a patio cover with a drop-down shade cloth.

THE PLAN

VALLEY RESPONSIVE BUILDING FORM

Two competing principles must be balanced: on the one hand compact floor plans keep the exterior walls to a minimum, but for good cross ventilation and daylighting, "L" shaped and courtyard homes that are essentially one -room deep are best. These shapes also create shared, shaded outdoor spaces.

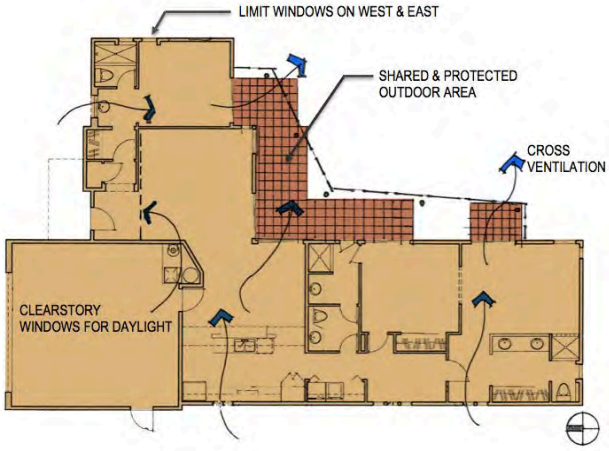

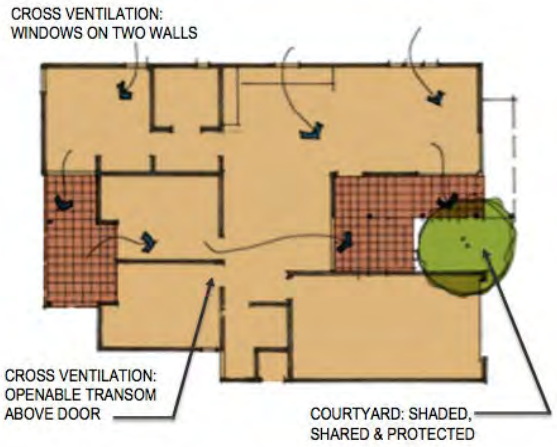

AROUND THE HOME

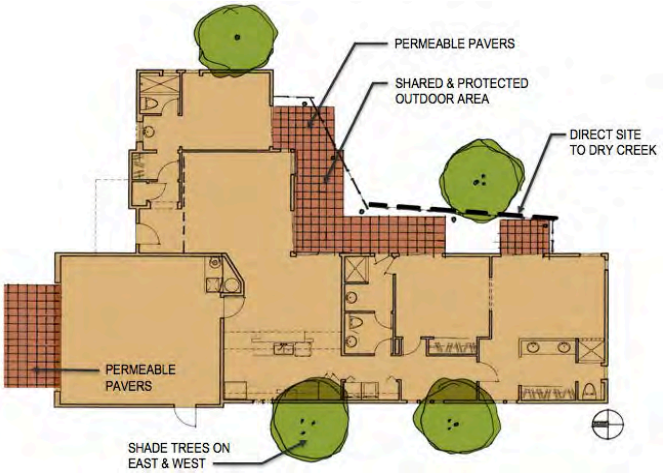

MODIFY MICRO-CLIMATE: Add trees to shade the building and the outdoors.

LIMIT HARDSCAPE: This will reduce the "heat island" effect. Also separate exterior paving from the house slab.

USE PERMEABLE PAVERS: Water can seep between the pavers to reduce runoff.

DIRECT RAIN WATER: Direct roof and site water to "dry creek" landscape areas.

USE DESIGN TO REDUCE HEAT LOADS

the envelope

ROOF & ATTIC

ROOF ASSEMBLY

THE ROOF
Insulation is the principal means of resisting heat transfer, and generally more is better. The location is also important. If the insulation is on top of the roof sheathing it helps more than the value from batt insulation between rafters – but both together is the best.

A reflective, "cool roof" system intercepts radiant heat buildup. There are "cool roof" rated tiles, shingles and metal roof systems for sloped roofs. Single-ply "cool roof" systems for flat roofs are very effective, and cumulatively, over the entire city, the heat island effect is reduced by "cool roof" systems. A "cool roof" system also prolongs the life of the roof membrane itself. Also consider a radiant barrier on the sheathing or insulation to help hot air move to the vents.

A ventilated roof system shades the actual weathertight envelope thus prolonging its life, and circulates air over the membrane which also keeps it about the same temperature as the ambient air. Installing a roof-mounted solar system essentially creates a ventilated roof system.

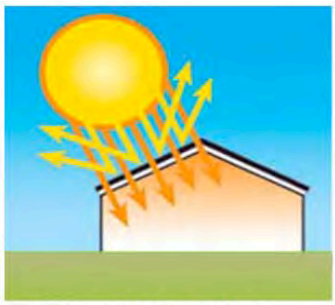

ROOF WITH CONVENTIONAL PAINT

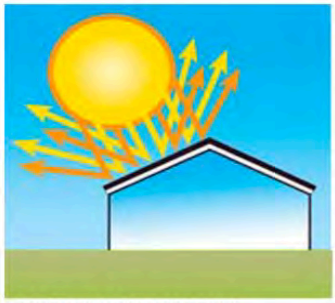

ROOF WITH COOL ROOF PAINT

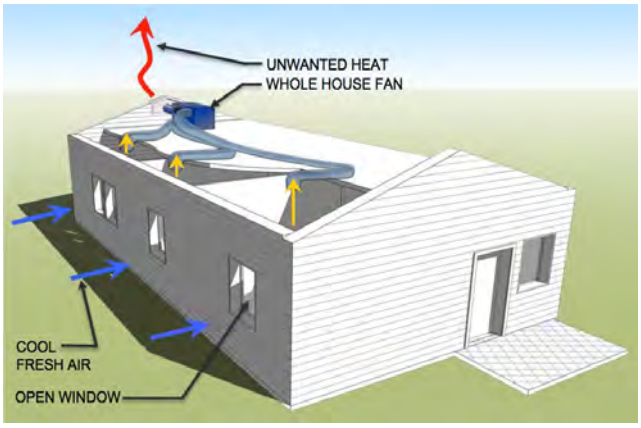

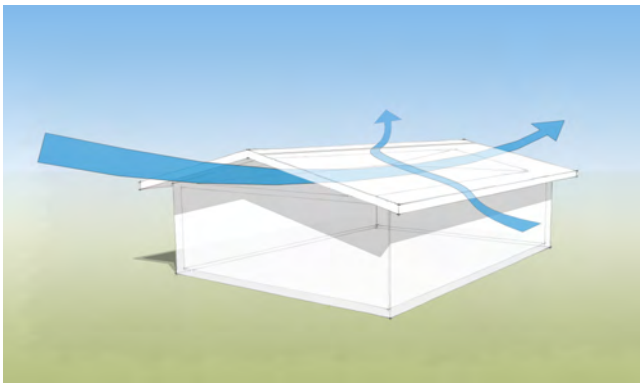

ATTIC COOLING

ATTIC
Attic temperatures can reach 120 degrees, and the insulation at the ceiling joists becomes completely saturated with heat. All through the night the ceiling radiates heat into the rooms below.

Airflow through the attic space is critical in reducing heat buildup. Ventilation requires inlet and outlet vents. Solar powered exhaust fans with inlet vents at the eave, a ridge vent combined with eave vents, and dormer vents near the ridge and eave vents are all valid approaches, but the size and number of vents must be calculated.

If attic insulation is placed under the roof sheathing, the attic is part of the conditioned space and AC ducts are more efficient. But all cracks at the roof-to-wall joints must be sealed.

In new construction, a whole house fan system for night ventilation is required in order to take advantage of the lower evening temperature.

DESIGN THE ROOF TO REDUCE HEAT

the envelope

WINDOWS & WALLS

WINDOW ASSEMBLY

KEEP THE SUN OUT

Windows: Direct sunlight heats up the inside of a building the same way it makes a steering wheel too hot to touch. The best way to prevent radiant heat buildup is to shade the window. Additionally, the glass itself should be coated with a low emissivity (Low-e) substance.

This type of coating reflects much of the radiant energy and is measured by Solar Heat Gain Coefficient (SHGC.) The lower the number, the better (0.23 is much better than 0.50). However, the lower values are really only useful on windows that get direct sunlight.

U-Factor is the efficiency of the entire window to resist heat transfer. A lower U-factor is better.

Check the Energy Code for required SHGC's and U-Factors.

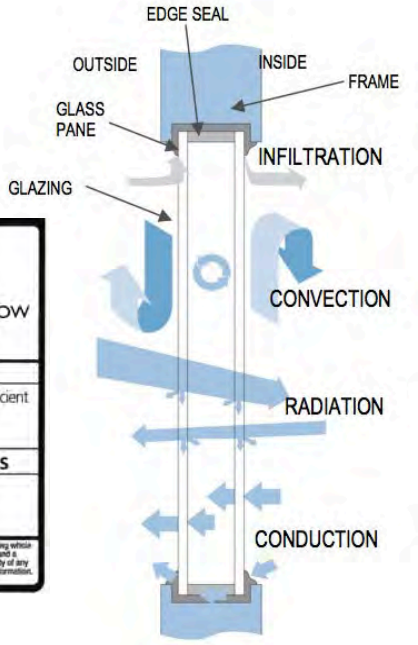

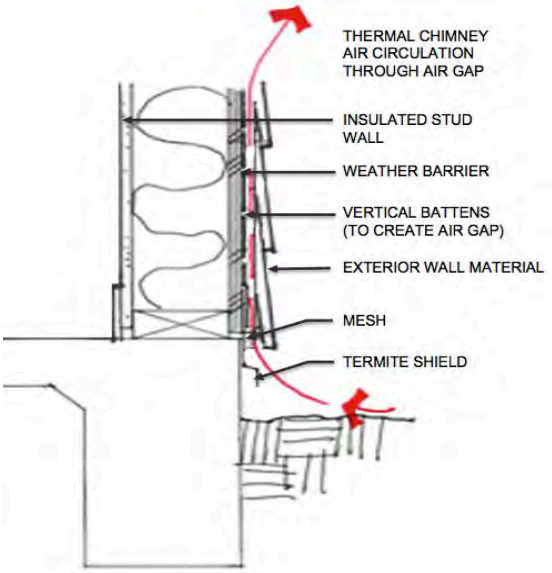

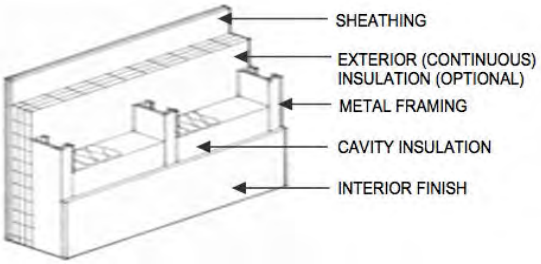

WALL INSULATION

WALLS

Resisting heat transfer through walls generally is accomplished by insulation. More is better. Where it is also matters: if rigid insulation is placed on the outside of the framing, there is no "thermal bridging" through the studs, and the batt insulation between studs doesn't get as saturated with heat. R-19 insulation is the minimum required in walls.

Walls also heat up from direct sunlight; if ambient air temperature is 100, direct sunlight can add another 15 degrees to the heat trying to get inside. Shade on walls as well as windows is useful.

Even without shade, a ventilated wall system can cut the heat load. The first surface that the sun hits is separated from the wall itself and air circulates between the "skin" and the weather barrier and wall structure. This means the insulation in the wall only has to deal with the ambient air temperature (and a little radiant heat from the skin).

There are minimum values to meet in the Energy Code. However, if you are already adding insulation, increase the insulation values to fill all possible space available in the framing area. The additional cost of material is minimal and the labor is the same, especially on the roof. Check the Energy Code for minimum insulation values: R-30 on the roof, and R-19 in the walls.

DESIGN WINDOWS TO REDUCE SOLAR HEAT

passive strategies

DAYLIGHTING STRATEGIES

CONTROL HOW DAYLIGHT ENTERS THE BUILDING

BALANCE DAYLIGHT

Natural daylight is uplifting and creates a feeling of connectedness to nature. It is difficult to bring daylight into all the rooms in most homes, and in larger rooms it may be difficult to balance the glare that comes from sliding glass doors when located on only one wall. Skylights and light monitors can balance light distribution within a room, bring light into dim areas, and can serve as relief vents for the "thermal chimney" effect.

LIGHT SHELF
A light shelf can be used in combination with high-reflecting ceilings to reflect natural daylight that enters the building.

SKYLIGHT
Installing skylights will allow natural daylight to enter the building where windows may not exist. Skylights with splayed openings distribute the natural light deeper into the space. Walls immediately below skylights are sources of dynamic and indirect illumination.

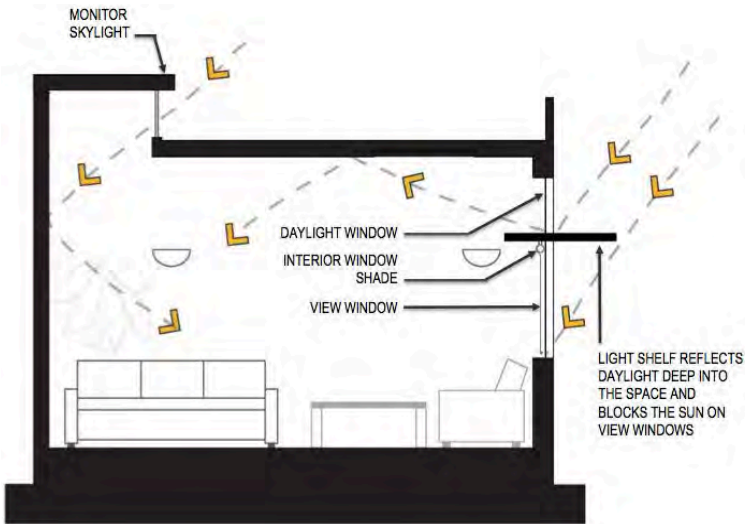

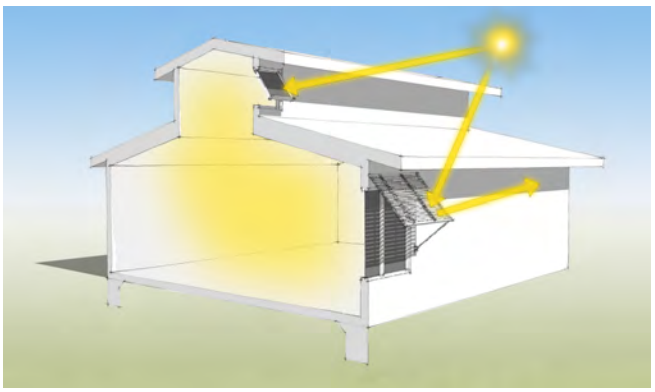

REDUCE GLARE

BILATERAL LIGHTING
Light distribution is improved by admitting daylight from more than one point in the space; the daylight entering the space can be reflected off multiple sidewalls. Additionaly, the glare from a vertical window next to a sidewall is less severe than that from a horizontal window in the middle of a room.

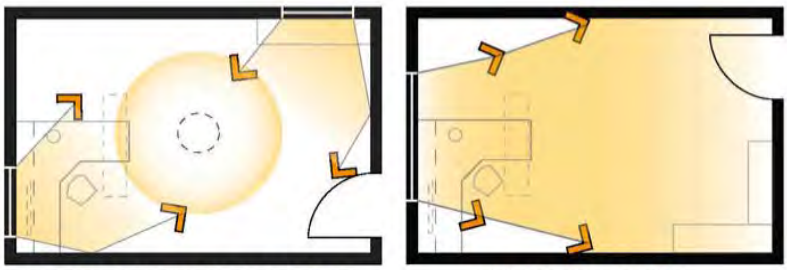

BILATERAL LIGHTING WITH SKYLIGHT — UNILATERAL LIGHTING

USE DESIGN TO CONTROL DAYLIGHT

passive strategies

PASSIVE ENERGY

AIR MOVEMENT

For five months a year, natural ventilation is an essential part of indoor comfort and reducing energy use. Cross ventilation through windows is the easiest path, but the thermal chimney effect works for homes and condos that may not have adequate or appropriate window placement. High bay spaces or tower elements use the thermal chimney effect to draw air up and out, and also provide natural light to interior spaces.

"Night purging" is the process by which cool night air is drawn through the house to replace stale and warmer air. When combined with surfaces that have high thermal mass (tile or concrete floors, stone counter tops, even tile walls) these materials hold their "cool temperature" and delay the need for air conditioning during the day. They give up their heat when cool night air passes over them.

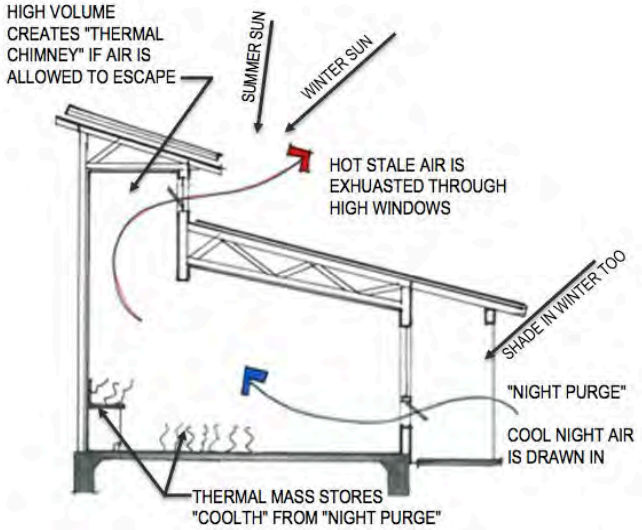

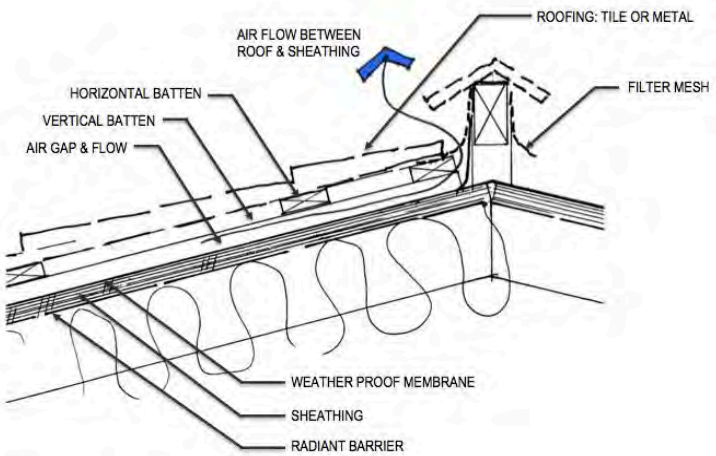

VENTILATED ROOF SYSTEM

Ventilated roof systems use double battens to create an air space between the roof sheathing and the roofing system (generally tile or metal). The air is drawn by convection from the eave up to the ridge, and the separation between the roofing material and the sheathing prevents direct heat transfer (conduction). Place mesh at eave and ridge to help keep birds, bugs and rodents out.

RADIANT HEATING

Radiant temperature control relies upon the exchange of heat between a person's body and the surrounding surfaces. In a "radiant" system the temperature of the surrounding surfaces is what matters, not the actual air temperature.

Radiant floor heating systems are generally understood – warm liquid circulates in tubes through the floor slab; the floor feels warm to the touch, and it radiates warmth to the rest of our bodies. A solar thermal system can provide hot water as can a gas-fired water heater. These systems use limited energy to the pump moving the warm liquid, and there are no fans.

The Energy Code requires a minimum R-value for flooring for insulation of radiant floors.

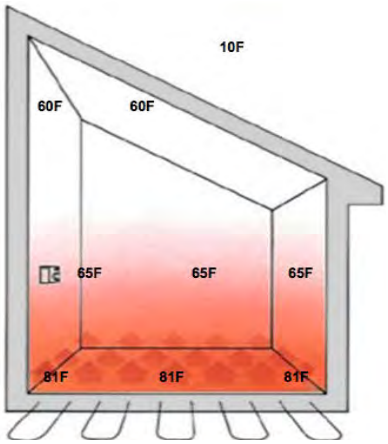

MOVE AIR TO REDUCE TEMPERATURES

the equipment

EQUIPMENT

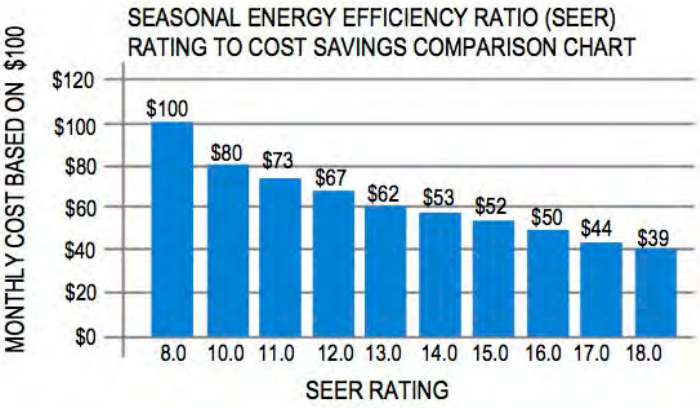

AIR CONDITIONING

The biggest energy draw is air conditioning (HVAC), so designing the building for energy efficiency (shade, lots of insulation, daylighting, Energy Star appliances) will minimize the heat gains that the HVAC unit has to overcome. The HVAC can be "right-sized" so the smallest possible HVAC unit will do the job.

HVAC units with the highest efficiency (defined as SEER) have two-stage compressor motors. Only during the hottest days will the second, more energy-consuming, stage be called upon.

The Energy Code requires a minimum of 13 SEER for new HVAC equipment.

Annual and Life Cycle Costs and Savings for 1 Central Air Conditioner(s)

	1 ENERGY STAR Qualified Units	1 Conventional Units	Savings with ENERGY STAR
Annual Operating Costs*			
Energy cost	$383	$631	$248
Energy consumption (kWh)	*3,515*	*5,793*	*2,279*
Maintenance cost	$0	$0	$0
Total	**$383**	**$631**	**$248**
Life Cycle Costs*			
Operating costs (energy and maintenance)	$4,043	$6,664	$2,621
Energy costs	$4,043	$6,664	$2,621
Energy consumption (kWh)	*49,204*	*81,105*	*31,901*
Maintenance costs	$0	$0	$0
Purchase price for 1 unit(s)	$3,413	$2,857	-$556
Total	**$7,456**	**$9,521**	**$2,065**
		Simple payback of initial additional cost (years)†	**2.2**

TESTING AND VERIFICATION

When building a new home, test the ducts for leakage using a "blower door" test to see how much air leaks out of the house through cracks, electrical outlets, windows and doors. This provides an opportunity to seal the cracks and gaps and save money through the selection of very efficient HVAC units. The Energy Code requires many of the tests and verifications in order for homeowners to recieve the energy savings of the design intended.

The Energy Code has requirements and guidance for additional required testing when working on such equipment to ensure the equipment was installed correctly. Mechanical replacement is a big and pricey investment. Checks and balances help to get the return on investment.

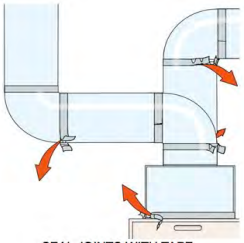

SEAL JOINTS WITH TAPE

AIR HANDLER

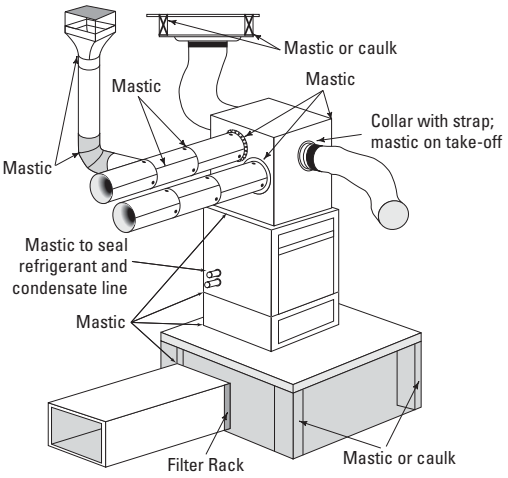

DESIGN THE "RIGHT SIZE" EQUIPMENT

WHAT SHOULD I DO NOW

FOR MY APARTMENT BUILDING?

MULTI-FAMILY NEW & REMODEL

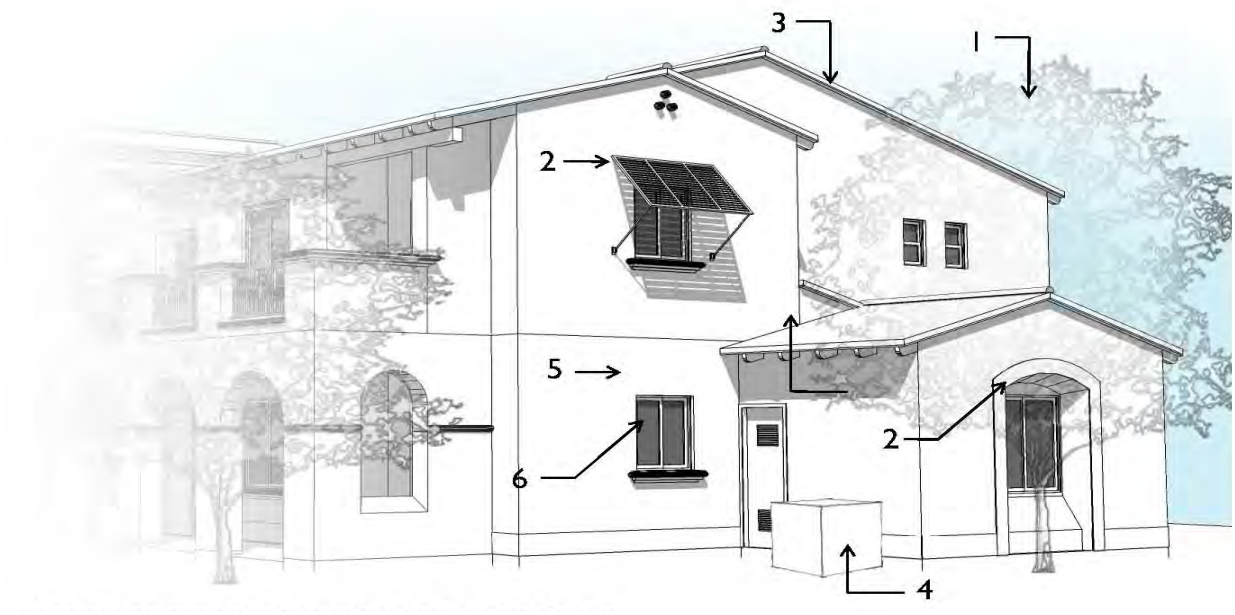

1 SHADE

Add trellis and awnings; plant trees and vines on lattices.

2 WINDOWS

Add film to existing single pane windows. Consider replacing windows for more savings.

3 COOL ROOF

Add coating on existing roofing, or install a "cool roof" system.

4 HVAC

Replace AC units with higher efficiency rating. (SEER values)

5 LIGHT COLORS

Paint exterior surfaces light colors to reflect the sun and heat.

6 DUCT TEST/SEAL

Perfom a "duct leakage" test to find leaks in existing ducts. Seal all joints and cracks.

multi-family

SUSTAINABLE DESIGN OPTIONS
TO CONSIDER FOR
EXISTING MULTIFAMILY REMODEL

site & existing conditions

SITE CONSIDERATIONS

START FROM THE OUTSIDE

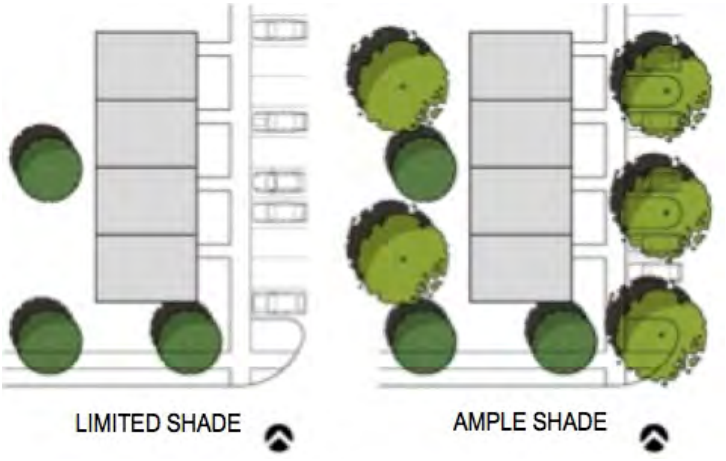

Trees that shade roofs, walls, and even walkways will modify the micro-climate and reduce heat gain.

Do a parking usage study to determine if the project is over-parked; the study should be taken at three times during the day, and over a week during three seasons - spring, winter and summer. If evidence shows more than 10% empty parking spaces, consider approaching the Planning Department for a reduction.

Tree cover, recreational use or on-site retention can be improved by removing paving and cement. In addition, the "heat island" effect can be reduced that way.

TEST FIRST

HOW IS IT FUNCTIONING NOW
As part of preparing to remodel and/or upgrade find out how the apartment units are working – test the ducts to look for leakage by doing a "blower door" test to see how much air leaks out of the unit through cracks, electrical outlets, windows and doors. Testing just 15% of the units will give a good sense of major defects.

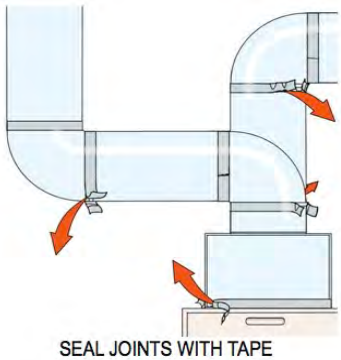

Testing provides an opportunity to seal the cracks and gaps and save money through the selection of very efficient HVAC units. The Energy Code requires many of the tests and verifications to take advantage of the energy savings the design intended.

USE DESIGN TO REDUCE ENERGY LOADS

the envelope

ATTIC & ROOF

THE ENVELOPE

INTEGRATED ROOF SYSTEM

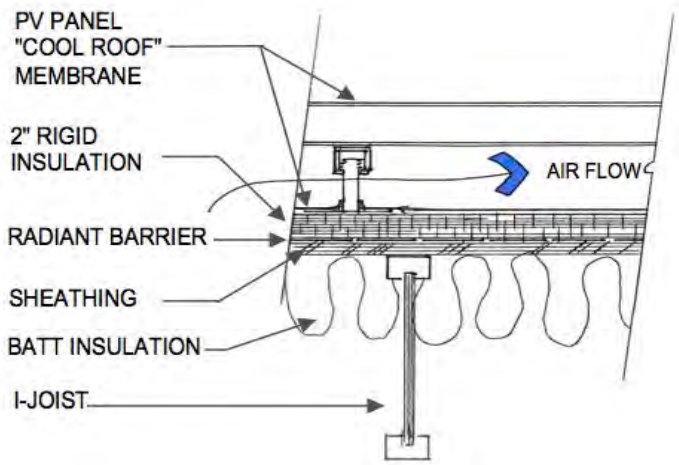

ROOF
Heat gain through the roof is the largest single load the HVAC system has to counteract. Because the roof is exposed to the sun all day long the whole assembly quickly gets saturated with heat, and even during the night it continues to transfer heat inside.

Re-roofing should accomplish two objectives: reflect solar radiant heat and resist heat transfer. "Cool roof" systems and radiant barriers reflect heat. Insulation increases the resistance to heat transfer, and rigid insulation on top of the existing sheathing keeps heat from penetrating the roof structure or attic insulation. A "ventilated" roof system accomplishes all of these objectives.

In general, the lighter a roof is - in color and weight - the more effective it is in keeping the building cool.

When roofing, a cool roof may be required by the Energy Code depending on roof slope and other conditions. Check the Energy Code for requirements and exceptions.

AIR MOVEMENT

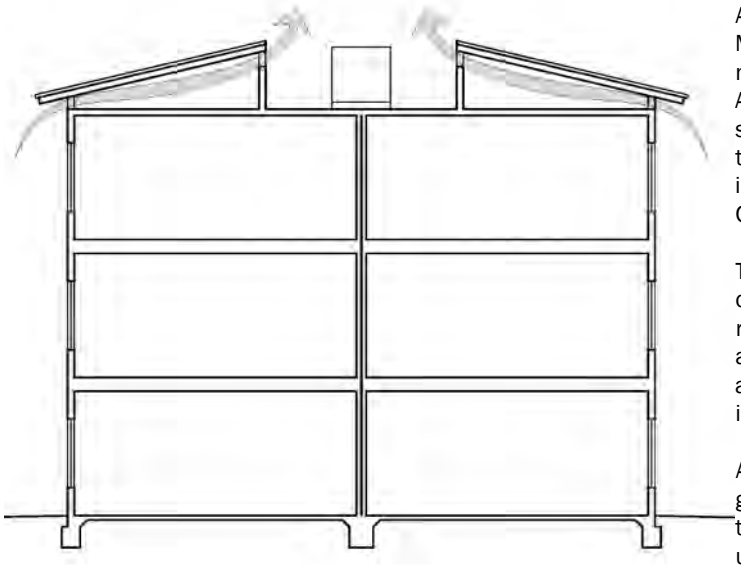

ATTIC
Most older apartment buildings have only nominal insulation installed on the ceiling joists. Adding more insulation is a good investment, but should be combined with improving airflow through the attic. When remodeling, R-19 roof insulation is the minimum required by the Energy Code.

The temperature in closed attics can reach 120 degrees. Ventilation requires inlets and outlets, relief vents must be added low and high to take advantage of convection ventilation, and adding a solar powered exhaust fan without adding intake vents will not work.

Adding insulation, a radiant barrier AND sealing gaps and cracks around ceiling light fixtures is the best practice. This reduces the electric usage of top floor apartments.

DESIGN TO PROVIDE CONSISTENT AIR FLOW

the envelope

WINDOWS & WALLS

WALLS

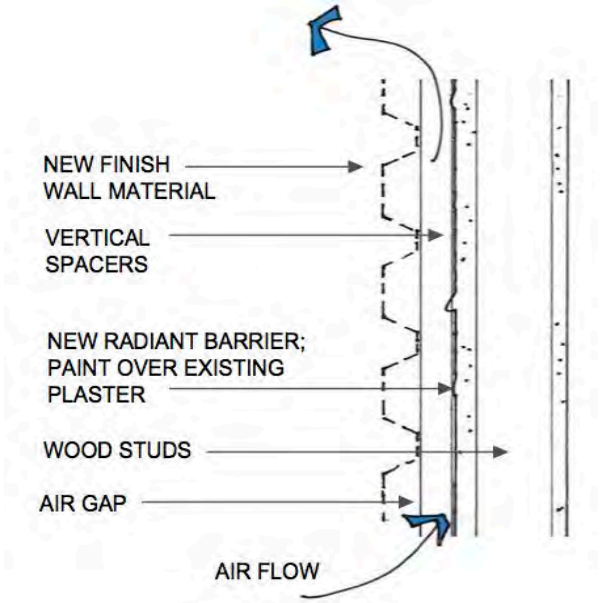

In most apartment buildings constructed before 1978, the walls are not insulated, but efforts to increase the insulation values to existing walls are costly and disruptive.

Planting shade trees, creating trellises or living walls and painting the walls a light color cost little and will reduce the heat build-up.

For walls with severe western exposure that can't be shaded, a ventilated wall system can reduce solar radiant heat gain.

When remodeling, R-11 wall insulation is the minimum required by the Energy Code.

WINDOWS

In buildings constructed before 1978, windows are energy sieves – not only are the frames highly conductive (aluminum or steel), the glazing is single pane, the glass is clear (no Low-e coating), the weatherstripping has deteriorated, and even the connection to the surrounding wall material may have cracks.

Replacing windows is relatively simple and not disruptive (the new frames fit within and are attached to the existing frames), but it can be costly. A full-building replacement program should be tailored so that windows facing east, south or west have better SHGC than north-facing windows. Replacement windows may require tempered glass. Check the Energy Code for minimum requirements.

An interim approach is to add film to the inside of the glass on windows that get direct sun. The film will reflect a considerable amount of solar heat gain, but heat will still come through cracks and the hot glass.

Shade windows with trees or awnings.

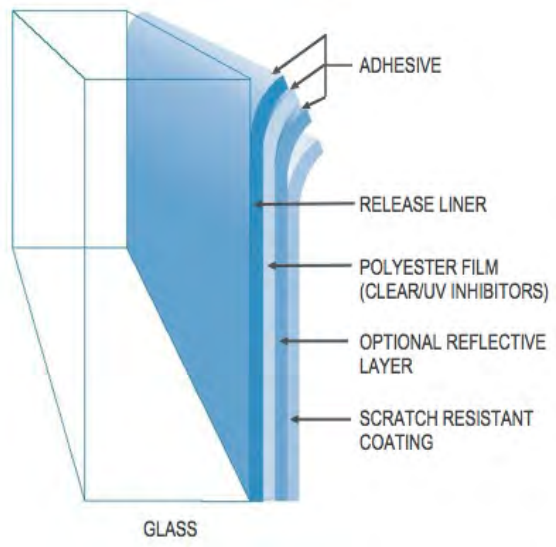

DESIGN WINDOWS & WALLS TO REDUCE SOLAR HEAT

passive strategies

DAYLIGHTING & VENTILATION

SOLAR TUBE SKYLIGHTS

DAYLIGHTING & VENTILATION
Self-flashed tubular skylights make it relatively easy to bring daylight into dark interior rooms or into large rooms where glare is a problem because of large expanses of glass on only one wall. Skylights can balance the distribution of natural light and reduce artificial light during the day.

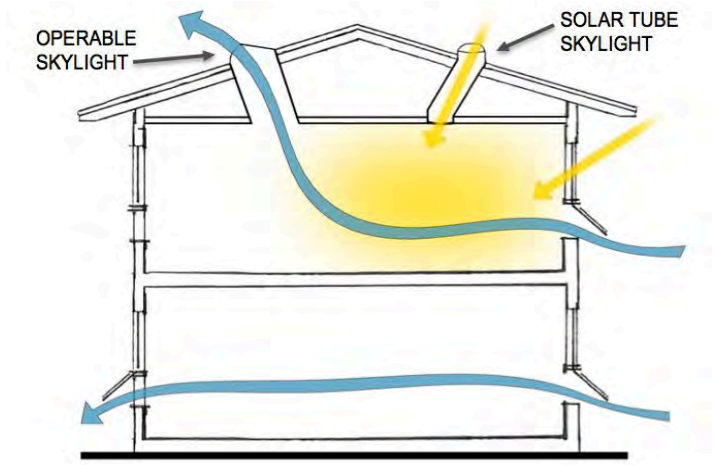

In some cases, operable skylights can provide daylight and a way to naturally ventilate high volume spaces using natural upward flow of hot air. Opening the skylights at night can provide "night purging" in areas without cross ventilation.

When adding new skylights, check that the area allowed for skylights meets the requirements of the Energy Code.

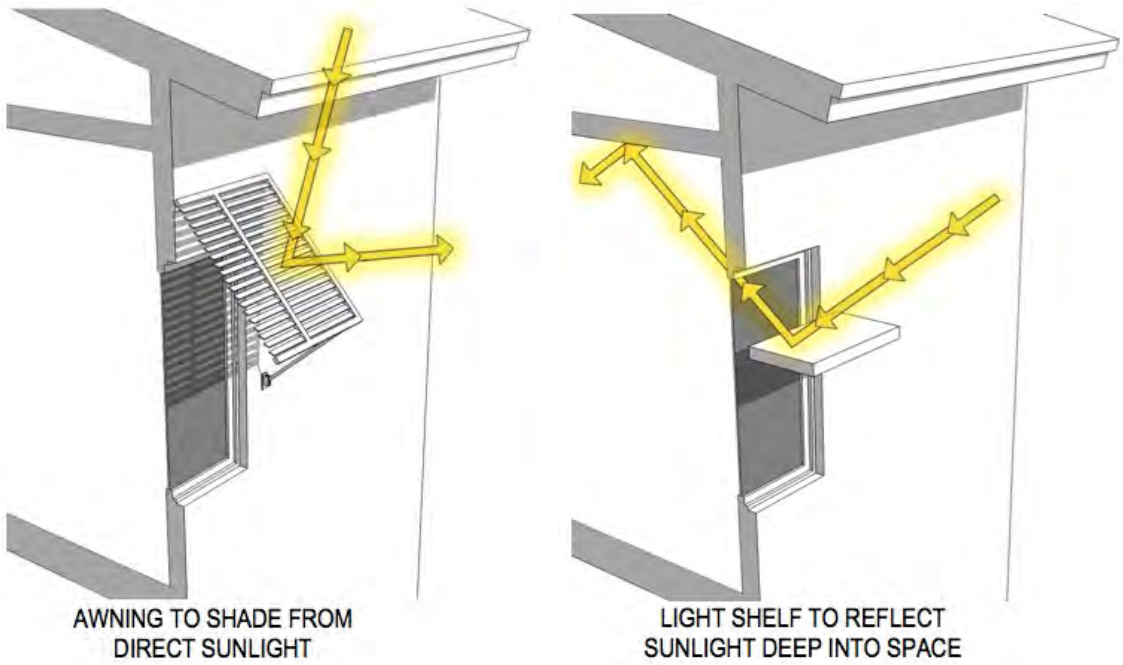

DESIGN WITH NATURAL LIGHT & NATURAL VENTILATION

the equipment

EQUIPMENT

AIR CONDITIONING

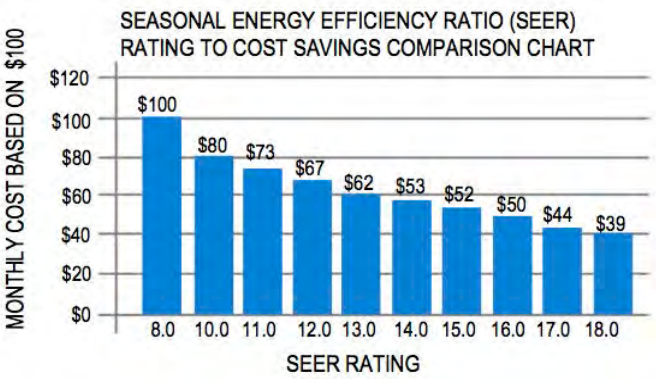

EQUIPMENT
Upgrading the envelope (roof, attic, walls and windows) will significantly reduce the cooling load. Doing a careful room-by-room cooling load calculation may mean a smaller HVAC system will suffice (e.g. 2-ton vs. 3-ton). In addition, new HVAC systems are much more energy efficient (measured by the SEER rating). Units with 14 SEER or higher have two-stage compressors, so only during the hottest days will the second stage compressor be required; the rest of the year the compressor runs with lower energy usage.

Annual and Life Cycle Costs and Savings for 1 Central Air Conditioner(s)

	1 ENERGY STAR Qualified Units	1 Conventional Units	Savings with ENERGY STAR
Annual Operating Costs*			
Energy cost	$383	$631	$248
Energy consumption (kWh)	*3,515*	*5,793*	*2,279*
Maintenance cost	$0	$0	$0
Total	**$383**	**$631**	**$248**
Life Cycle Costs*			
Operating costs (energy and maintenance)	$4,043	$6,664	$2,621
Energy costs	$4,043	$6,664	$2,621
Energy consumption (kWh)	*49,204*	*81,105*	*31,901*
Maintenance costs	$0	$0	$0
Purchase price for 1 unit(s)	$3,413	$2,857	-$556
Total	**$7,456**	**$9,521**	**$2,065**
		Simple payback of initial additional cost (years)†	**2.2**

EQUIPMENT DECAL

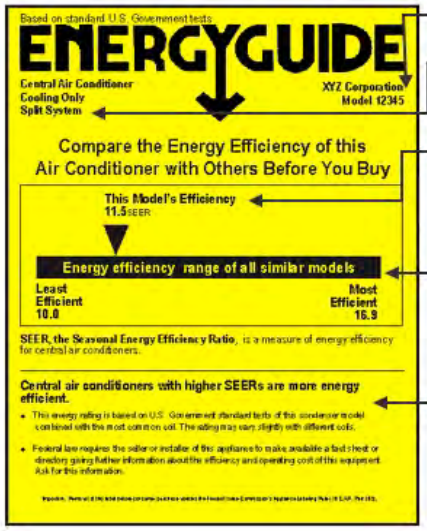

MANUFACTURER & MODEL NUMBER

INFORMATION ABOUT FEATURES, CAPACITY & SIZE HELPS YOU COMPARE BRANDS.

THE ENERGY EFFICIENCY RATING FOR THE PRODUCT. THE HIGHER THE NUMBER, THE MORE ENERGY-EFFICIENT THEPRODUCT AND THE LESS IT COSTS TO RUN.

THE RANGE OF RATINGS FOR SIMILAR MODELS, FROM LESS EFFICIENT TO MORE EFFICIENT. THIS SCALE SHOWS HOW A PARTICULAR MODEL MEASURES UP TO THE COMPETITION.

IMPORTANT INFORMATION ON ENERGY USE & OPERATING COSTS IS PUBLISHED IN FACT SHEETS & PRODUCT DIRECTORIES. INSTALLERS & CONTRACTORS ARE REQUIRED BY LAW TO PROVIDE THESE TO YOU.

The Energy Code has requirements and guidance for additional testing required when working on such equipment to ensure the equipment was installed correctly. Mechanical replacement is a major investment. Checks and balances help to get the return on investment.

"RIGHT SIZE" YOUR EQUIPMENT

SUSTAINABLE DESIGN OPTIONS

TO CONSIDER FOR

NEW MULTIFAMILY

SITE CONSIDERATIONS

START FROM THE OUTSIDE

The building shape and how it is oriented on the lot are the first crucial steps.

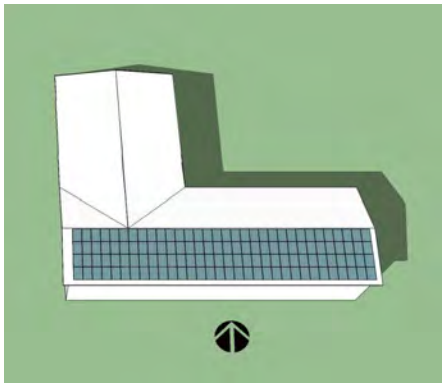

ORIENTATION
It is common knowledge that walls facing west get a lot of heat during the summer, so generally buildings should be designed as rectangles and sited with the long axis running east-west. This orientation also allows optimal south-facing roof for solar panels.

BUILDING FORM
Multi-family site planning rarely allows simple east-west rectangle layouts. Courtyard buildings, however, can be oriented in either direction, and compensate for bad exposures. Each wing of the building can shade the other.

Building elements can also provide shade.

Additionally, because most cities require private outdoor space, deep shade can be created by balconies that project out or are carved into the building.

USE DESIGN TO REDUCE ENERGY LOADS

site

the building plan

PLAN

THROUGH UNIT

BUILDING PLAN
There are three basic unit types – through units (front to back), inside units (exterior walls facing one direction only) and corner units.

Through units have the advantage of cross-ventilation through the entire unit. However, rooms may only have windows on one wall, which creates glare and does not allow cross-ventilation within a single room. Light shelves are valuable to bounce light deep into rooms.

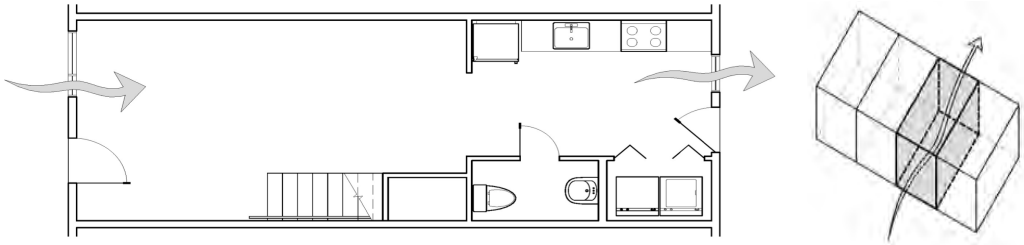

INSIDE UNIT

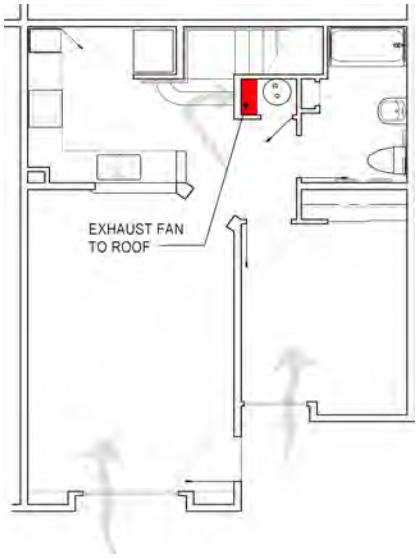

Inside units are the most difficult in terms of cross-ventilation and daylighting, but they are also the most energy efficient because they have the least exterior exposure.

Inside units on the top floor can benefit from light monitors and the "thermal chimney" effect for ventilation. Ground floor units need a roof-mounted exhaust fan to adequately ventilate the unit. The exhaust fan must be wired with an interlock to prevent the HVAC and fan from running at the same time.

Light shelves are important to distribute daylight.

CORNER UNIT

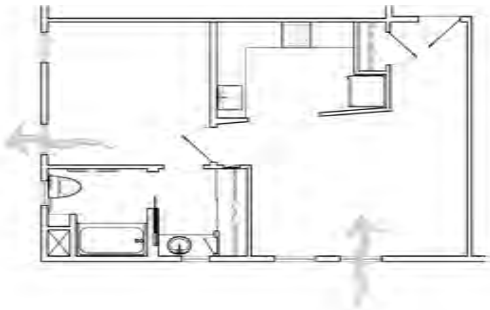

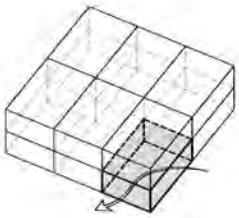

Corner units allow some rooms to have windows on two walls, and they have the ability to provide through-unit ventilation.

USE DESIGN TO PROVIDE CONSISTENT AIR FLOW

ATTIC & ROOF

THE ENVELOPE

INTEGRATED ROOF SYSTEM

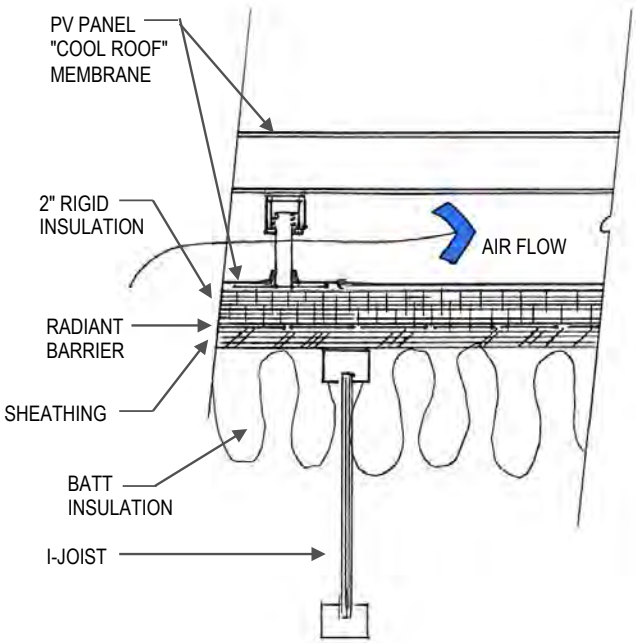

INTEGRATED ROOF SYSTEM
Insulation is the principal means of resisting heat transfer, and generally more is better. But the location is also important. If the insulation is on top of the roof sheathing it helps the roof sheathing and rafters as well as batt insulation from getting saturated with heat. Both types - rigid and batt- together works best.

A reflective, “cool roof” system intercepts the solar radiant heat buildup. There are “cool roof” rated tiles, shingles and metal roof systems for sloped roofs. The installation of radiant barriers helps move unwanted air out of the attic and it's required by the Energy Code. Check the Energy Code for requirements and exceptions. Single-ply “cool roof” systems for flat roofs are very effective, and cumulatively, over the entire city, the heat island effect is reduced by “cool roof” systems. A “cool roof” system also prolongs the life of the roof membrane itself.

A ventilated roof system shades the actual weathertight roofing thus prolonging its life, and circulates air over the membrane which also keeps it about the same temperature as the ambient air. Installing a roof-mounted solar system essentially creates a ventilated roof system. 15% of the total roof area needs to be solar ready. Check with the Energy Code for requirements and exceptions.

AIR MOVEMENT

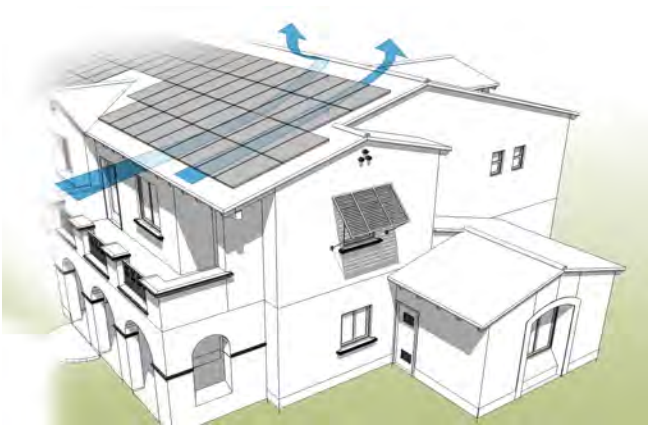

ATTIC
Attic temperatures can reach 120 degrees, and the insulation at the ceiling joists becomes completely saturated with heat. Throughout the night, the ceiling radiates heat into the rooms.

Airflow through the attic space is critical in reducing heat build up. Ventilation requires inlet and outlet vents. In multifamily buildings, the attic is divided by draft stops or fire resistive walls, therefore each attic cavity must be ventilated separately. Solar powered exhaust fans with inlet vents at the eave may be an effective design strategy.

In new construction, a whole house fan system for night ventilation is required in order to take advantage of the lower evening temperature.

USE DESIGN TO PROVIDE CONSISTENT AIR FLOW

the envelope

the envelope

WINDOWS & WALLS

WALLS

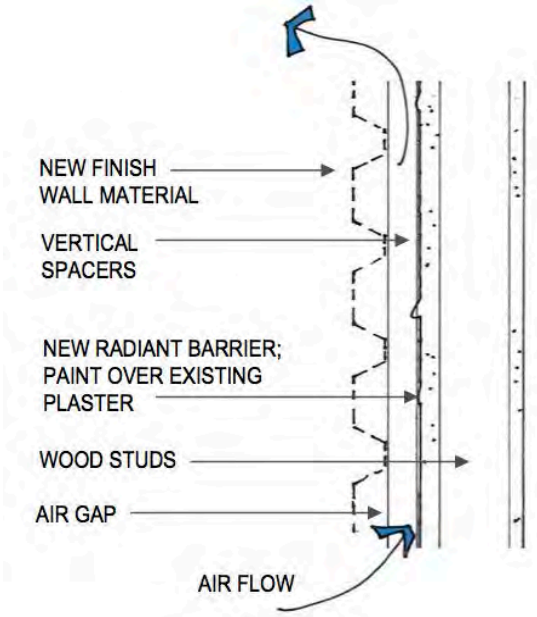

WALLS
Resisting heat transfer through exterior walls generally is accomplished by adding insulation. More is better. Where it is located also matters: if rigid insulation is placed on the outside of the framing, there is no "thermal bridging" through the studs, and the batt insulation between studs doesn't get as saturated with heat. R-19 insulation is the minimum required in walls.

Walls also heat up from direct sun; in addition to ambient air temperature of 100 degrees, direct sunlight can add another 15 degrees to the heat load. So shading walls with trees and roof overhangs is recommended.

In some cases a west-facing wall may utilize a "ventilated wall" system to shade the wall weather barrier and circulate air between the outer "skin" and the weather barrier. Place mesh at the base to help keep bugs and rodents out.

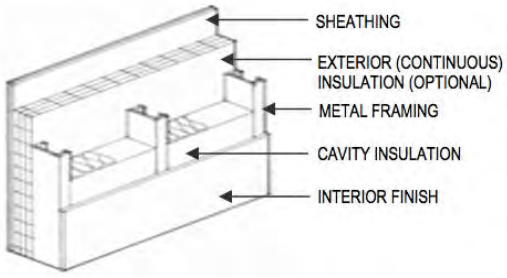

WINDOWS

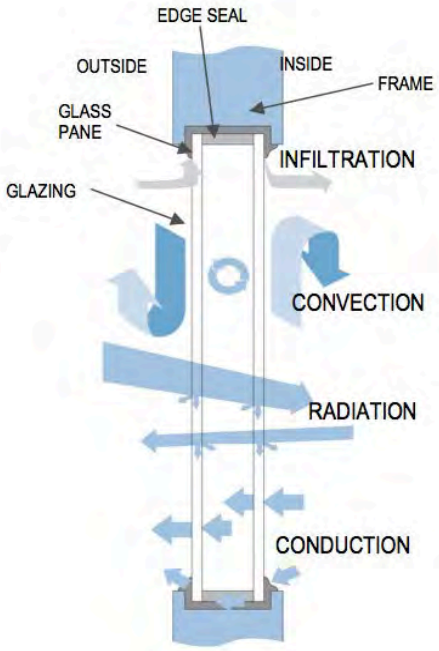

KEEP HEAT FROM THE SUN OUT
Direct sunlight heats up the inside of a building the same way a car's steering wheel gets too hot to touch.

The best way to prevent radiant heat buildup is to shade the window. Additionally, the glass itself should be coated with a low emissivity (Low-e) substance. This type of coating reflects much of the radiant energy and is measured by Solar Heat Gain Coefficient (SHGC.) The lower the number, the better (0.23 is much better than 0.50.) However, the lower values are really only useful on windows that get direct sunlight.

Check the Energy Code for minimum required SHGC's and U-factors.

DESIGN WINDOWS & WALLS TO REDUCE SOLAR HEAT

passive strategies

DAYLIGHTING & VENTILATION

NATURAL LIGHT

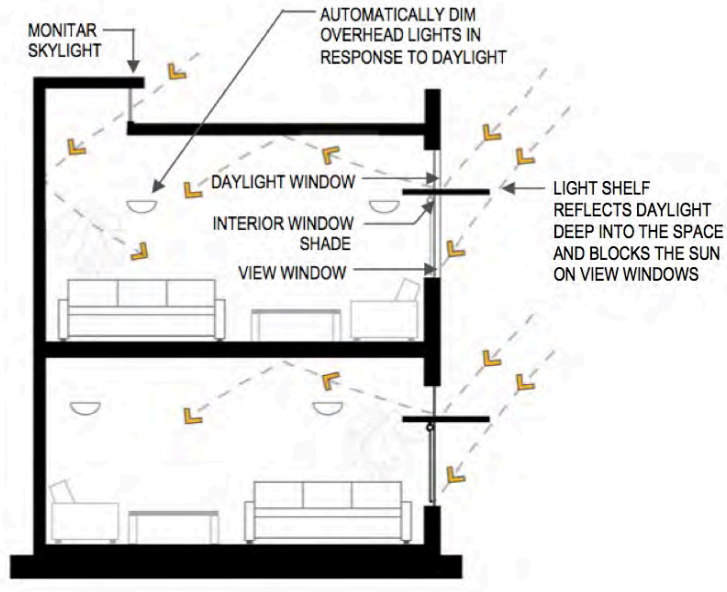

DAYLIGHTING
Apartments often have windows on only one wall which results in harsh light distribution – glare near the window and dimness near the back wall. On upper floors, tubular skylights can bring natural light into interior rooms and dark corners. On lower floors, windows can be designed with light shelves to bounce light deep into rooms. This is especially desirable when the kitchen is on the interior wall.

When installing skylights, check that the area, sizes and values meet the requirements of the Energy Code.

VENTILATION AND THERMAL MASS

Apartments on the top floor can take advantage of the thermal chimney effect to draw hot air out, and light monitors to bring daylight in. Both effectively lower energy consumption.

In multi-unit buildings, ground floor and inside units may have no effective cross ventilation. To draw cool night air through the unit, install a roof-mounted whole-house fan with interlock controls to prevent the fan and HVAC working at the same time.

To take advantage of thermal mass and infrequent replacement, use resilient flooring or exposed concrete throughout a unit. The concrete will remain cool throughout the summer, and during the winter area rugs can be used to cut the chill.

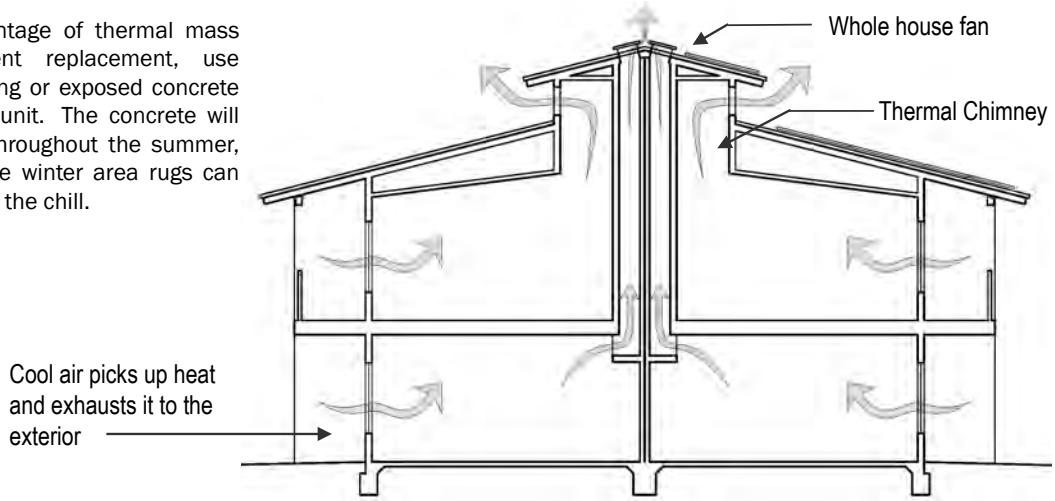

DESIGN WITH NATURAL VENTILATION & NATURAL LIGHT

the equipment

EQUIPMENT

AIR CONDITIONING

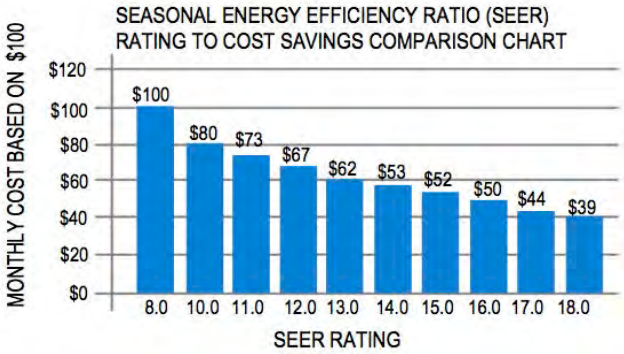

HVAC
The biggest energy draw is air conditioning, so designing the building for energy efficiency (shade, lots of insulation, daylighting, Energy Star appliances) will minimize the heat gains that the HVAC unit has to overcome. The HVAC can be "right-sized" so the smallest possible HVAC unit will do the job.

HVAC units with the highest efficiency (defined as SEER) have two-stage compressor motors. Only during the hottest days will the second, more energy-consuming stage be called upon.

Annual and Life Cycle Costs and Savings for 1 Central Air Conditioner(s)

	1 ENERGY STAR Qualified Units	1 Conventional Units	Savings with ENERGY STAR
Annual Operating Costs*			
Energy cost	$383	$631	$248
Energy consumption (kWh)	*3,515*	*5,793*	*2,279*
Maintenance cost	$0	$0	$0
Total	**$383**	**$631**	**$248**
Life Cycle Costs*			
Operating costs (energy and maintenance)	$4,043	$6,664	$2,621
Energy costs	$4,043	$6,664	$2,621
Energy consumption (kWh)	*49,204*	*81,105*	*31,901*
Maintenance costs	$0	$0	$0
Purchase price for 1 unit(s)	$3,413	$2,857	-$556
Total	**$7,456**	**$9,521**	**$2,065**
		Simple payback of initial additional cost (years)†	**2.2**

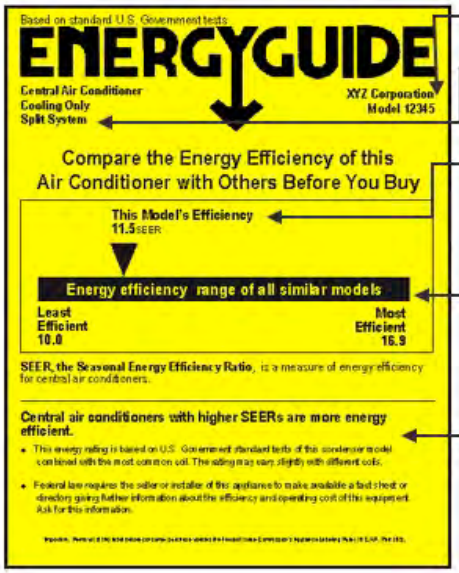

MANUFACTURER & MODEL NUMBER

INFORMATION ABOUT FEATURES, CAPACITY & SIZE HELPS YOU COMPARE BRANDS.

THE ENERGY EFFICIENCY RATING FOR THE PRODUCT. THE HIGHER THE NUMBER, THE MORE ENERGY-EFFICIENT THEPRODUCT AND THE LESS IT COSTS TO RUN.

THE RANGE OF RATINGS FOR SIMILAR MODELS, FROM LESS EFFICIENT TO MORE EFFICIENT. THIS SCALE SHOWS HOW A PARTICULAR MODEL MEASURES UP TO THE COMPETITION.

IMPORTANT INFORMATION ON ENERGY USE & OPERATING COSTS IS PUBLISHED IN FACT SHEETS & PRODUCT DIRECTORIES. INSTALLERS & CONTRACTORS ARE REQUIRED BY LAW TO PROVIDE THESE TO YOU.

The Energy Code has requirements and guidance for additional testing required when working on such equipment to ensure the equipment was installed correctly. Mechanical replacement is a major investment. Checks and balances help to get the return on investment.

DESIGN THE "RIGHT SIZE" EQUIPMENT

WHAT SHOULD I DO NOW

FOR MY BUSINESS?

COMMERCIAL NEW & REMODEL

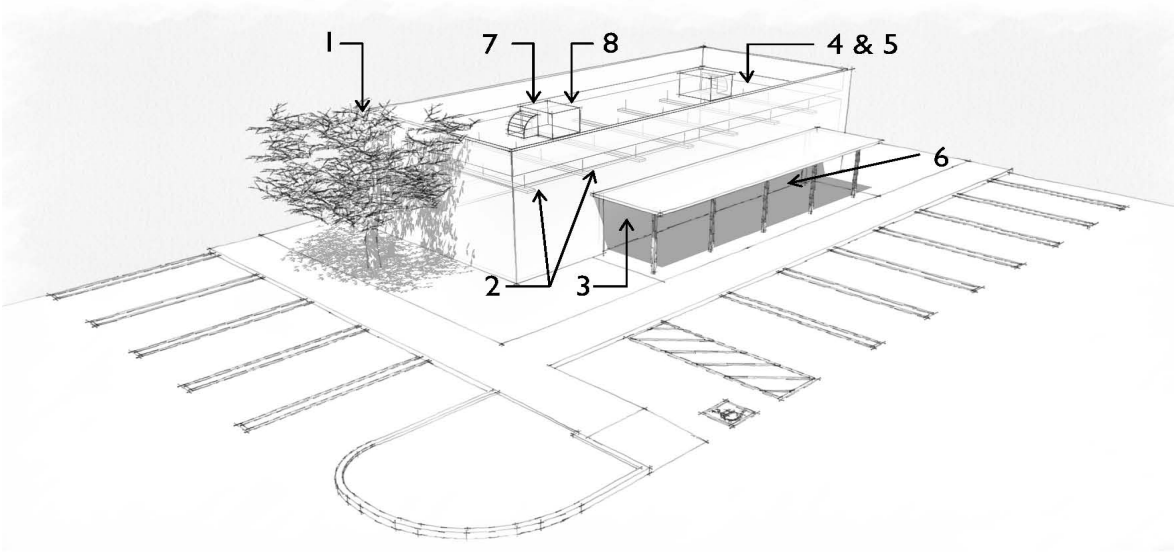

1 PLANT TREES ON WEST SIDE

2 UPDATE LIGHTING

Install compact fluorescent or LED bulbs, electronic ballasts and photo sensitive controls.

3 SHADE WINDOWS

Add trellis, awnings, trees, or canopies.

4 COOL ROOF

Add "cool roof" coating on existing roofing or use "cool roof" re-roofing system.

5 ADD INSULATION

Add spray or rigid foam on top of the roof.

6 ADD FILM

Install film with a low SHGC to single-glazed windows.

7 DUCT TEST/SEAL

Perfom a "duct leakage" test to find leaks in existing ducts. Seal all joints and cracks.

8 HVAC ≥ SEER 13

Replace AC with higher efficiency units, economizer cycle, and "right size" the unit after upgrading the insulation and windows.

commercial

SUSTAINABLE DESIGN OPTIONS
TO CONSIDER FOR
EXISTING COMMERCIAL REMODEL

site & building

SITE CONSIDERATIONS

START FROM THE OUTSIDE

ANALYZE WHAT EXISTS

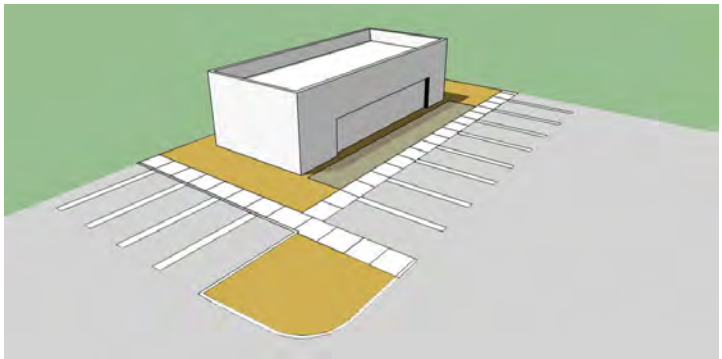

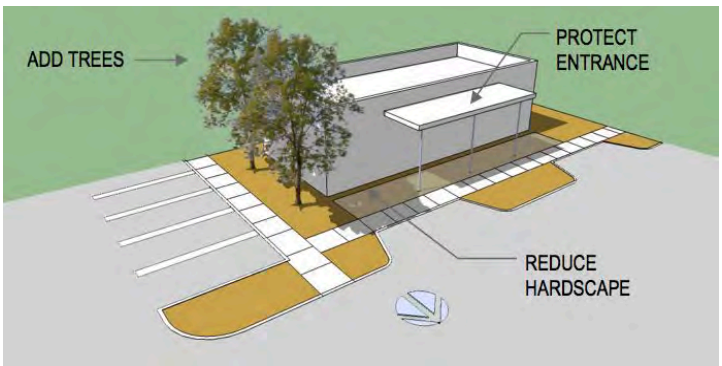

Most existing commercial buildings are assaulted from every angle by a harsh environment: they are surrounded by parking, there are no trees, the glass has no solar heat gain reflectivity, and there is little shade.

START OUTSIDE
The first steps to improving the building may be to make the surroundings more hospitable.

SHADE
Trees that shade roofs, AC units, walls and even walkways will modify the micro-climate and reduce heat gain.

REDUCE HARDSCAPE
Do a parking usage study to determine if the development is over-parked; the study should be taken at three times during the day, and over a week during three seasons - fall, winter and summer.

If evidence shows more than 10% empty parking spaces, consider approaching the Planning Department for a reduction.

Tree cover and on-site retention can be improved by removing paving and cement. In addition, the “heat island” effect will be reduced.

PROTECT THE ENTRANCE
An awning, canopy or arcade will not only reduce the solar heat gain, it will improve the customers' experience and perception of the building. Check also with the planning deparment and economic development agency for facade imporovement programs to help finance the design and construction.

INVOLVE THE TENANT
Some of these improvements can be done with little disruption to the existing tenants, and a savings-sharing agreement can be executed so both the tenant and the landlord gain from upgrades done now.

USE DESIGN TO REDUCE ENERGY LOADS

the envelope

THE ENVELOPE

IMPROVE THE ENVELOPE AND LIGHTING

Once you get to the building itself, upgrades that improve the thermal performance – better insulation, better windows, sealing ducts, and better lighting – ideally should be done before changing out the HVAC system. By improving the thermal performance, the HVAC system may be downsized. It is important to "right size" the HVAC system.

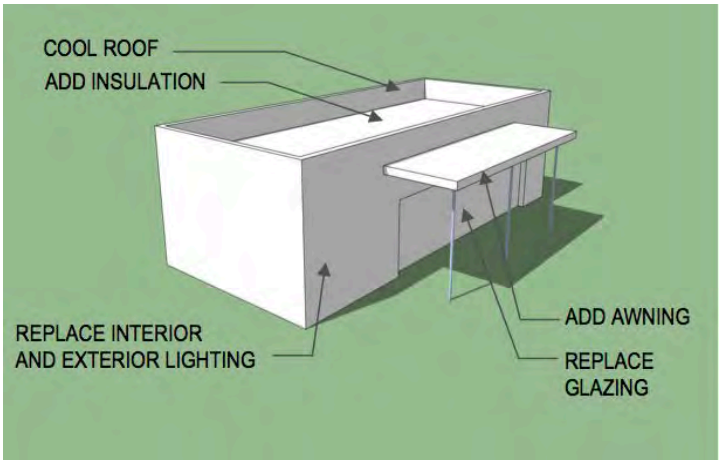

These changes can be phase. When the building needs a new roof, add rigid insulation on top of the sheathing or install a “cool roof” system. When a tenant moves out, add batt insulation to the underside of the roof structure; do a duct test on existing HVAC ducts to reveal leaks – and fix them; replace T-12 fluorescent fixtures with T-8 or T-5 direct-indirect fixtures with dimmable electronic ballasts; install spectrally selective film on east- south- or west-facing windows with lighting control.

Each of these steps will have an effect on the energy usage of the building, and will be more competitive in the market, but new leases need to be written so the owner recoups the capital costs to make these improvements.

ROOF & ATTIC

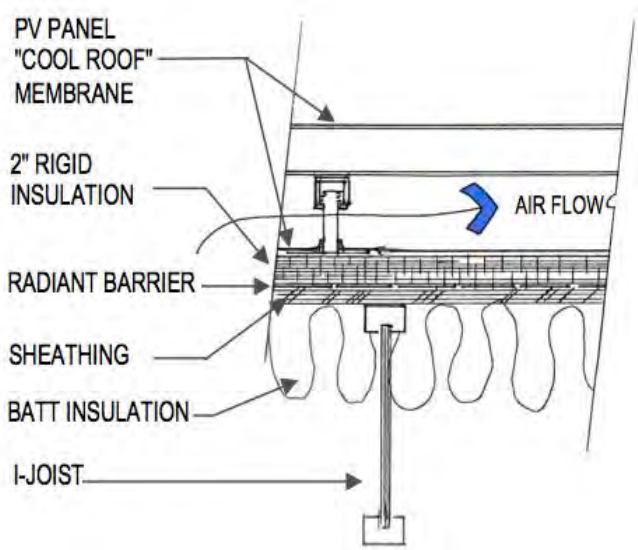

ROOF & ATTIC
Adding insulation, a “cool roof”, and a radiant barrier will have an immediate impact on the cooling load for any building, and can be done without disruption to tenants. When installing a "cool roof", there are regulations in the Energy Code depending on roof slope and other conditions. Check the Energy Code for requirements and exceptions.

MAKE YOUR OWN
Rooftop solar systems can make sense, but only after you have completed energy efficiency upgrades. The solar system can be part of an integrated roof system wherein the panels shade the roof membrane and also create an air gap that can foster air movement between the panels and the roofing.

DESIGN TO REDUCE HEAT GAIN

the envelope

WINDOWS

ASSEMBLY

In many older commercial buildings (offices and retail) full height single-glazed storefront systems span the full width of the front wall even though they do not serve a "display" function. A full replacement with dual glazed storefront system may be too costly, but improvements can still be made.

Shade for windows facing east, south and west is critical and can be done with awnings, light shelves, arcades, and even trees. For windows that cannot be shaded and get sun during the day, film that reflects heat can be mounted to the inside surface. A lower SHGC rating reflects more heat.

When replacing windows, check the Energy Code for minimum requirements.

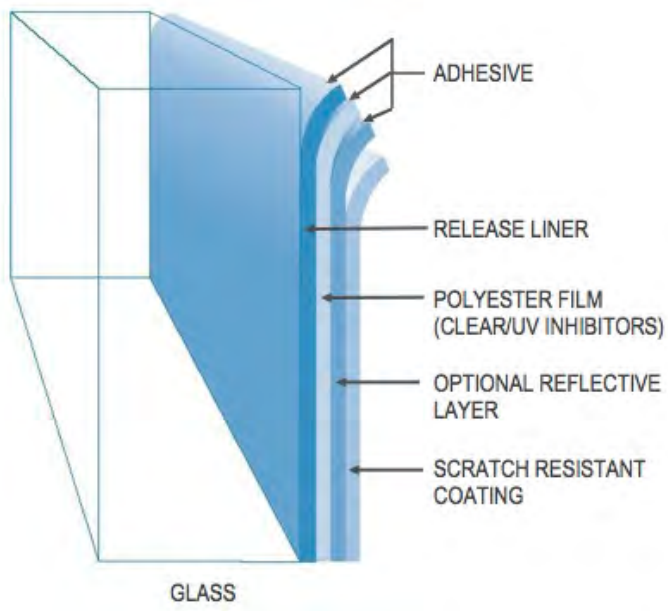

SHADE

Shade and better daylighting can be achieved with light shelves. The design and proportions of an existing storefront system can be improved aesthetically and thermally by adding light shelves. Internal films of different qualities can be added also. The film quality should be selected based on the function and orientation of the window. For example, windows facing north still recieve direct sunlight but it is not as intense. Therefore, in an office setting, windows can have higher levels of light passing through them with a standard solar heat gain coefficient compared to windows facing east or west.

Every new window comes with a NFRC label (National Fenestration Rating Council). The labels are always attached to the inside of the window to make sure they are installed properly.

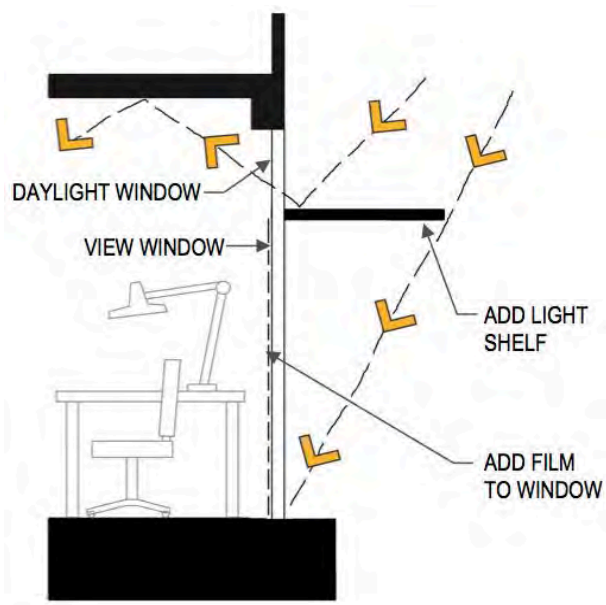

DESIGN WINDOWS TO REDUCE SOLAR HEAT LOAD

the equipment

EQUIPMENT

AIR BALANCE

GET THE RIGHT EQUIPMENT
Ideally the improvement of the thermal performance of the building is done prior to replacing the HVAC units so they are "right sized." Equipment that is oversized suffers due to on-off cycling and higher energy usage. New HVAC units should be "right sized" and have two-stage compressor motors and variable speed air handlers. This allows the system to accurately respond to the demand for cooling. The higher compressor function is required only during the hottest times of the year. Adding an economizer cycle also allows a building to be "night purged" when evening temperatures fall below 68 deg.

Economizers may be required by the Energy Code depending on the size of the unit.

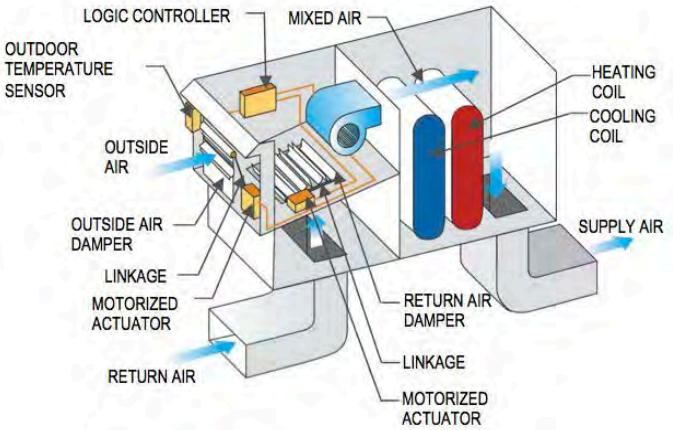

SEAL DUCTS

As part of preparing to remodel and/or expand, find out how the building is already working – test the ducts to look for leakage, perhaps do a "blower door" test to see how much air leaks into (or out of) the building through cracks, electrical outlets, windows and doors. While the workers are doing the main remodel, some remedial work such as duct and "air sealing" may be warranted and cost effective.

The Energy Code requires many of the tests and verifications in order for building owners to recieve the energy savings of the intended design.

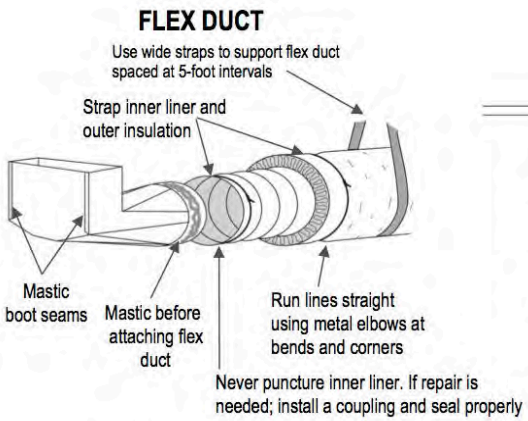

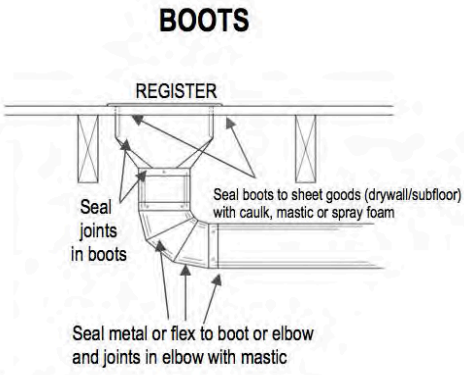

► Mastic is a gooey adhesive that is applied wet. It fills gaps and dries to a soft solid. Mastics may or may not contain reinforcing fibers, and they may be used with reinforcing mesh tape.

HEATING AND COOLING

AIR DISTRIBUTION

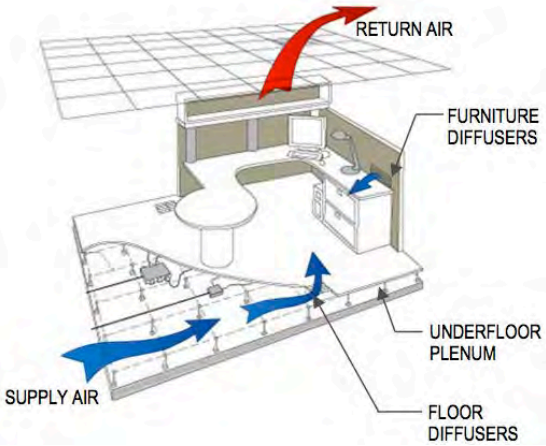

INNOVATIVE
UNDERFLOOR AIR DISTRIBUTION

For large office tenants, a raised floor with air distribution coming up through floor registers offers a number of benefits. Under floor distribution relies upon the natural flow of cool air introduced at occupied level and rising as it picks up heat from people, computers, and lights. As it rises to return registers near the ceiling, it also collects contaminants and odors and exhausts them above head level. This results in better indoor air quality.

The "displacement" system (cool air displaces hot air as it rises) saves energy because the air is not as cold as an overhead distribution (full mix) system, the velocity of the air is lower, and the heat from equipment and lights never mixes with the air people breathe.

An under floor distribution system may also include an "access floor" through which cable, telecommunication and electrical conduits run. For commercial spaces that are remodeled frequently, the flexibility of relocating registers and outlets in the floor may have significant long term savings.

LIGHTING

Windows provide free lighting, but they can also create glare. Light shelves, the glass itself and interior shades help control light getting into the building. Once inside, light from windows needs to be balanced with photo-sensor controlled lights and other technologies.

Since humans have the tendency to forget to turn the lights off and/or synchronize an optimum lighting flow inside of the building, lighting controls are critical and may be required for building improvements.

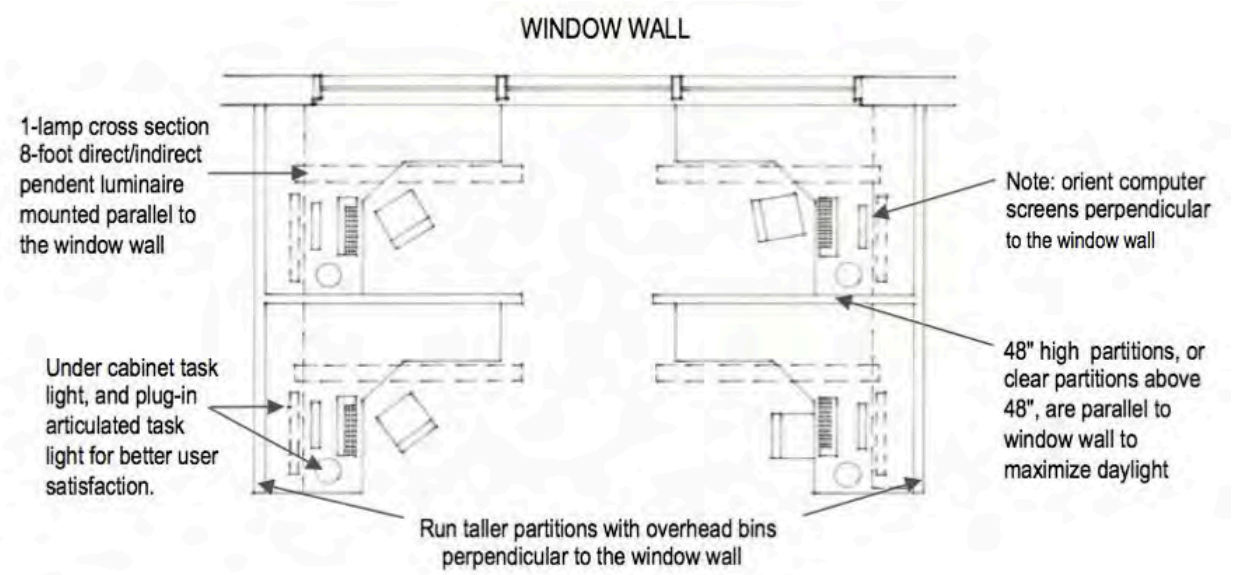

CONSIDER DIFFERENT METHODS OF AIR DISTRIBUTION

the equipment

SUSTAINABLE DESIGN OPTIONS
TO CONSIDER FOR
NEW COMMERCIAL

site & building

SITE CONSIDERATIONS

START FROM THE OUTSIDE

The building shape and how it is oriented on the lot are the first crucial steps.

ORIENTATION
Wherever possible, limiting exposure to the east and west is desirable from an energy efficiency point of view.

How the immediate surroundings support and protect the building is next.

MODIFY THE MICRO-CLIMATE
Shade is a simple and effective means to reduce the heat load on a building. Big trees can shade the building; when placed strategically, they can make the building seem welcoming (who doesn't want to be in shade in July); and when they shade the hardscape, the "heat island effect" is reduced.

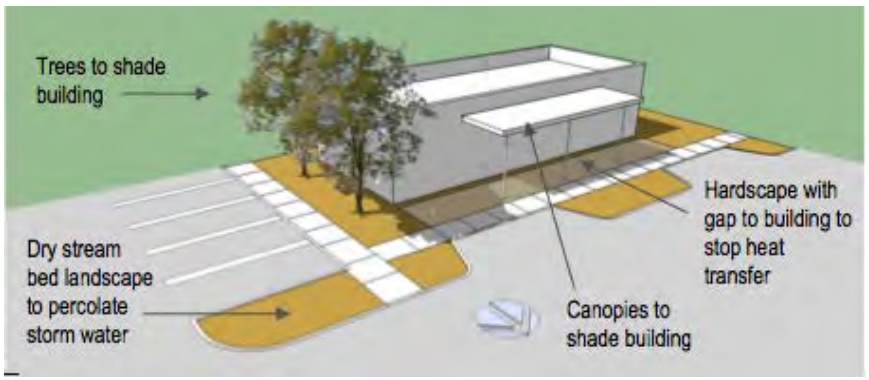

Reflected and radiant heat from hardscape can also be reduced by material selection; generally permeable pavers have less thermal mass (radiant heat) and scatter the sunlight more than concrete.

Permeable pavers also play a role in reducing stormwater run-off - water can seep between the pavers directly into the soil.

Building elements can also provide shade.

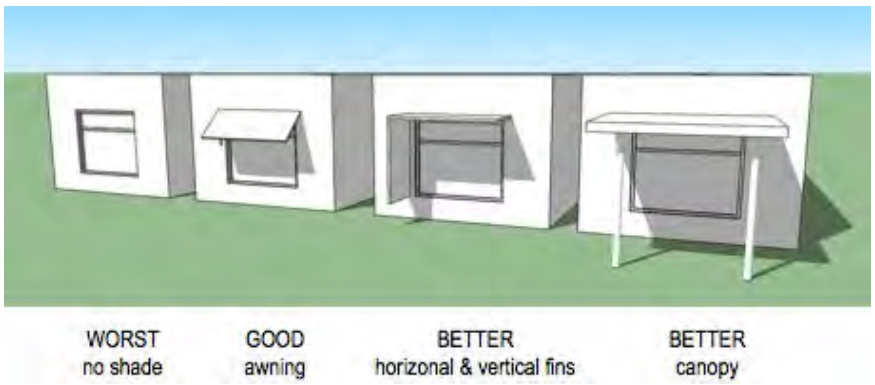

Roof overhangs, canopies, arcades and awnings are all part of the architectural vocabulary that has aesthetic value and can reduce heat loads by shading both windows and walls. Canopies and arcades also reach out from the building to welcome customers.

USE DESIGN TO REDUCE ENERGY LOADS

the envelope

ROOF & WALLS

THE ENVELOPE

REFLECT, SHADE & INSULATE

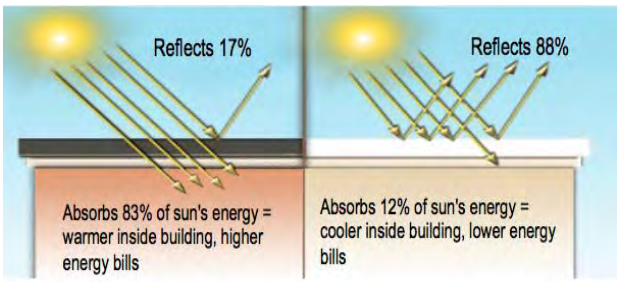

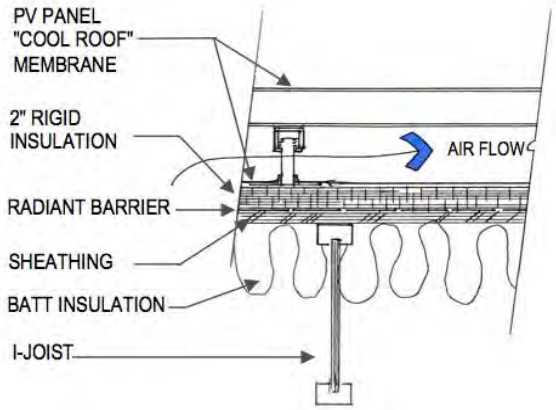

ROOF
For commercial buildings, a “cool roof” is a must. It reduces solar heat transfer into the building, it prolongs the life of the roof membrane itself, and it reduces the “heat island” effect for the whole city. Combining a radiant barrier, rigid insulation above the sheathing and batt insulation at the underside of the roof structure is the best envelope. Another advantage is that the HVAC ducts are within the insulated envelope.

INTEGRATED ROOF DESIGN
Shade, air movement, reflectance, and insulation all play a role in keeping heat out. An integrated roof design might include solar panels shading the membrane and creating a “ventilated roof” (air movement between the panels and the roof membrane), a reflective membrane (“cool roof”), rigid insulation on top of the sheathing, a radiant barrier on the sheathing, and batt insulation between the roof rafters.

The Energy Code has requirements when installing a "cool roof" depending on roof slope and other conditions. Check the Energy Code for requirements and exceptions.

WALL ASSEMBLY

WALLS
Rigid insulation on the exterior of walls (called EIFS - exterior insulation finish system) prevents thermal bridging and allows additional batt insulation within the cavity so the overall resistance of the wall is greatly improved. On masonry walls, placing rigid insulation on the exterior also takes advantage of the thermal mass of the block. For blank west-facing walls with no shade, a ventilated wall system with radiant barrier will greatly reduce the heat transfer from the intense solar exposure.

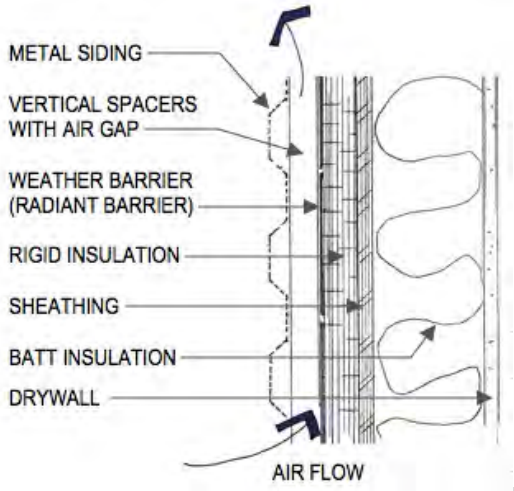

VENTILATED WALL
For west- and south- facing walls a "ventilated" or "second skin" wall system can greatly reduce heat transfer by blocking the solar radiation component and allowing air to circulate between the outer skin and the wall or window itself.

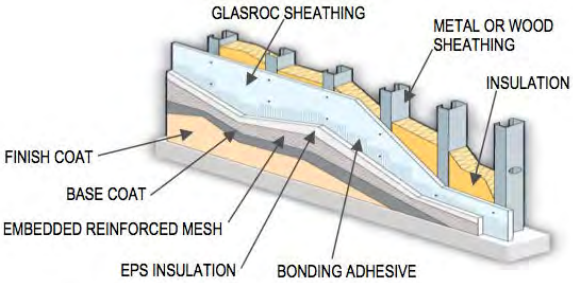

USE DESIGN TO REDUCE ENERGY LOADS

the envelope

WINDOWS

ASSEMBLY

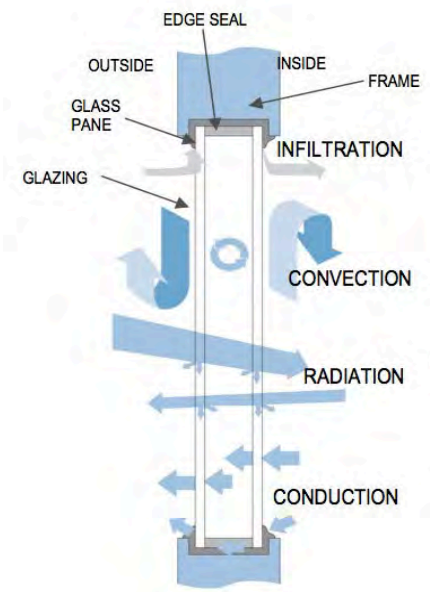

WINDOWS
Carefully choose the location and orientation of the windows. Windows are openings for natural light, views and displays, but are also openings for unwanted heat during the summer and unwanted cold during the winter.

Choose glass with the following features:
- Low-e coating; it lowers the amount of heat that enters the space.
- Low Solar Heat Gain Coefficient (SHGC) since this is the amount of solar radiation admitted which is important in hot climates.
- Low U-Factor since this helps to keep the conductive heat out
- Good window frame material with good weatherstripping
- Gas between the glass (argon or krypton)

The combination of these properties and good flashing around the openings will reduce air leakage.

Check the Energy Code for required SHGC and U-Factors.

SOLAR HEAT GAIN

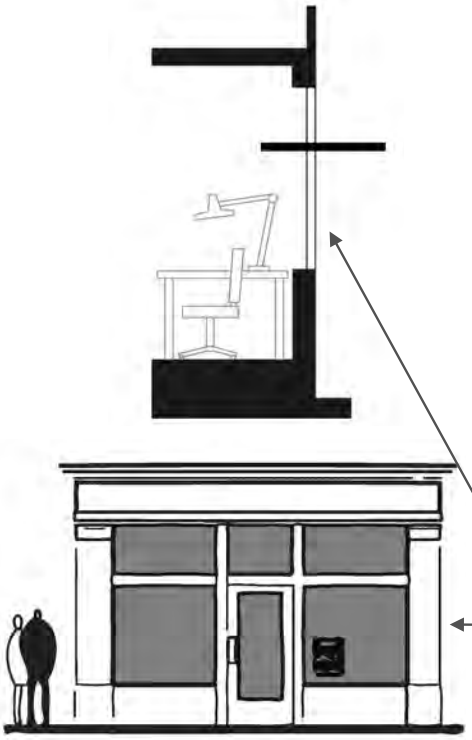

GLAZING IN STOREFRONT & WINDOWS
Windows in commercial buildings may warrant several different kinds of glazing to balance heat gain and visibility: display windows must be crystal clear, but for office windows the important qualities are controlling heat gain and glare, and storefront systems that are not display windows require a different balance of SHGC and visibility. Identifying the specific characteristics for each window will both optimize the performance of the window and will save energy.

U-FACTOR, SHGC & VISIBILE TRANSMITTANCE
The three key performance indicators in windows are the ability to reflect solar radiation (SHGC – lower number is better), the ability to resist the heat from air temperature (U-Factor – lower is better), and visible transmittance (how clear is the glass – 100% is crystal clear.) Within a building, different windows may require unique characteristics to perform optimally.

Office window facing east, south or west
U-factor @ 0.36, SHGC @ 0.25, VT @ 0.42

Storefront facing east, south or west
U-factor @ 0.41, SHGC @ 0.26, VT @ 0.46

DESIGN WINDOWS TO REDUCE SOLAR HEAT

passive strategies

DAYLIGHTING STRATEGIES

CONTROL HOW DAYLIGHT ENTERS THE BUILDING

BALANCE DAYLIGHT

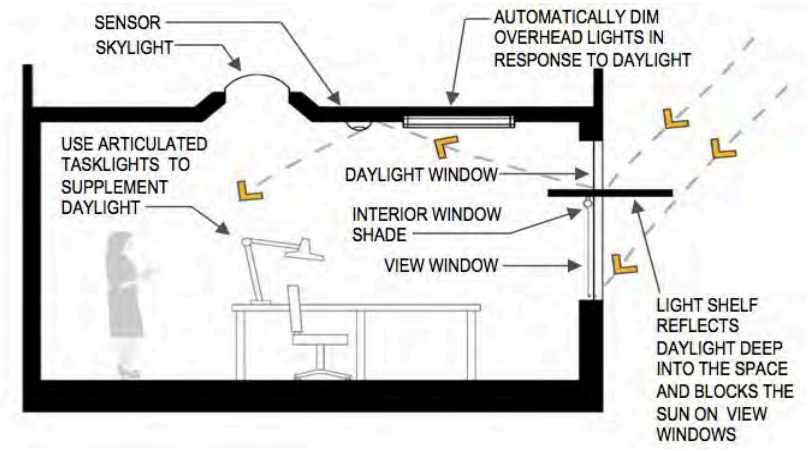

NATURAL LIGHT IS ALWAYS CHANGING
Within minutes the amount and quality of light that comes through windows and skylights can change dramatically; that is part of what brings life to a building. A building needs a variety of ways to respond to the dynamic nature of daylight. There are individual responses (pull down the shade or turn on a light), there are automatic controls (photosentive dimmers for general lighting), and there are fixed building elements (light shelves). All should be considered in a daylighting strategy.

CONTROLS

LIGHTING CONTROLS
Without lighting controls, daylighting will not save any energy. Automatic controls that sense daylight are essential because they ensure that electric lighting will be reduced when enough daylight is available and also adjust on cloudy days.

Lighting controls are crucial. Depending on the size of the room, the Energy Code requires lighting and daylight controls.

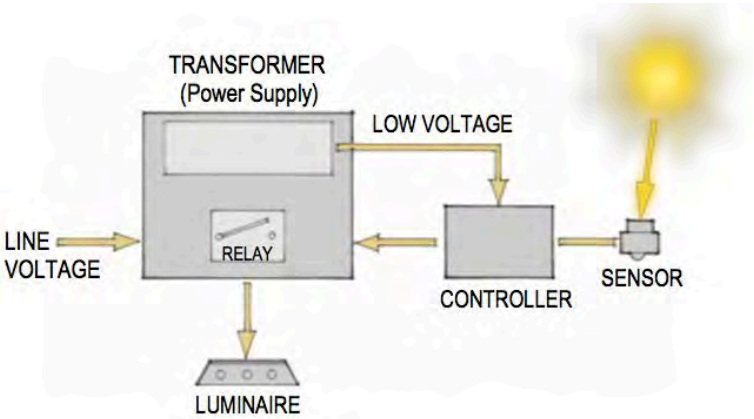

REDUCE GLARE

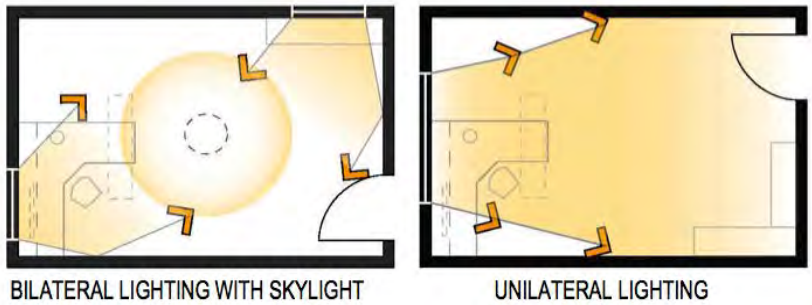

BILATERAL LIGHTING
Light distribution is improved by admitting daylight from more than one point in the space; the daylight entering the space can be reflected off multiple sidewalls. Additionaly, the glare from a vertical window next to a sidewall is less severe than that from a horizontal window in the middle of a room.

USE DESIGN TO CONTROL DAYLIGHT

the equipment

EQUIPMENT

AIR BALANCE

BALANCING INSIDE AND OUTSIDE AIR

The interaction between a building and its climate should be dynamic; the building should be able to respond in a variety of ways to changing conditions. For example, in the San Gabriel Valley, a well-balanced building can take advantage of natural ventilation during eight months of a year using operable windows and filtered outside air circulated through the HVAC system.

In the past, HVAC systems were designed as closed systems – recycling the same conditioned air – and windows were rarely operable. This saved money, but it also created indoor air quality problems. Current systems have requirements to draw outside air into the building. Balancing the requirements for fresh air and interior comfort is complicated. There are several strategies to lessen the energy demand to condition the outside air.

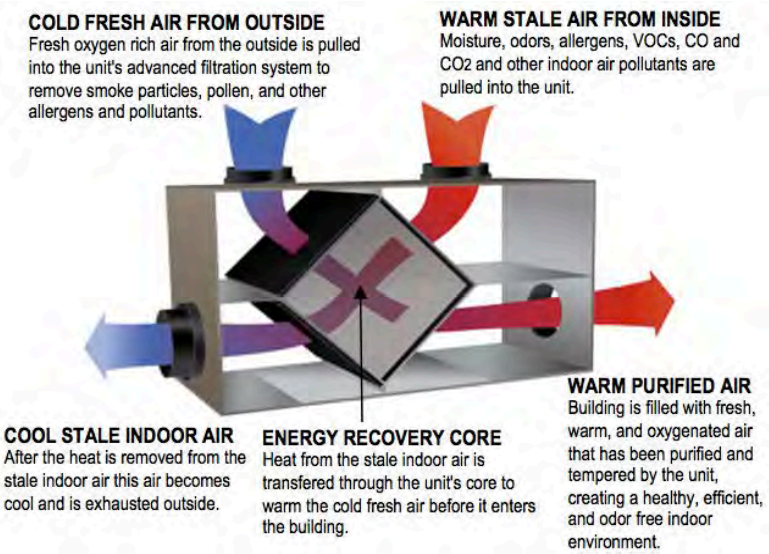

ENERGY RECOVERY

When fresh air comes into the building at 100 degrees it can be slightly cooled if the air being exhausted (at about 80 deg) can blow across (air-to-air heat exchanger) the fresh air. The incoming air might lose 10 degrees of heat.

PRE-COOLER

Some HVAC systems include an air-to-air evaporatively cooled pre-cooler. In this case, hot fresh air is drawn through an air-to-air heat exchanger where the fresh air passes over the tubes of the pre-cooler and some of the heat is transferred to the pre-cooled air. The different streams of air do not mix.

ECONOMIZER CYCLE

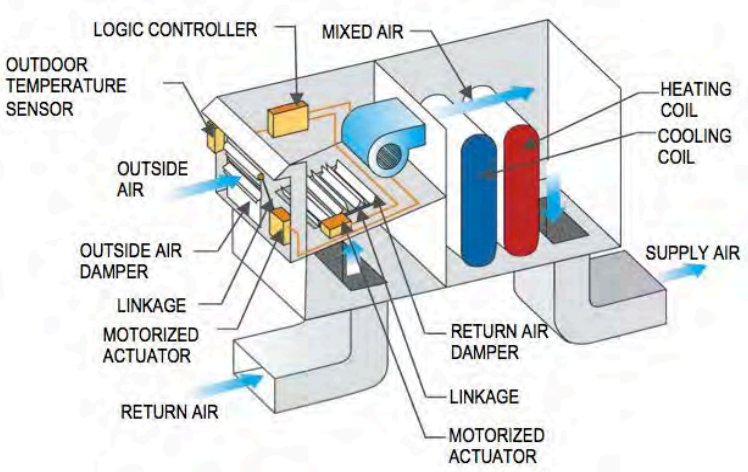

ECONOMIZER CYCLE

During the work day in a commercial building, heat is being added from many different sources – the people in the building, the lights, the computers and printers, and the outside temperature. The "internal" loads are often enough to require cooling even when the outside temperature is pleasantly cool. If the HVAC system has an economizer cycle it can draw 100% fresh filtered air through the building when the outside air is below a set temperature, such as 65 degrees. This is natural ventilation that is controlled and distributed by the HVAC.

Depending on the size of the unit, economizers are required in the Energy Code.

USE OUSTIDE AIR WHEN COOL OUTSIDE

the equipment

HEATING AND COOLING

AIR DISTRIBUTION

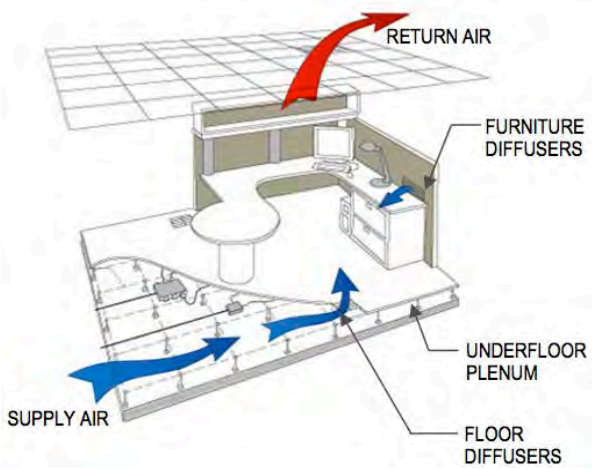

INNOVATIVE
UNDERFLOOR AIR DISTRIBUTION
For large office tenants, a raised floor with air distribution coming up through floor registers offers a number of benefits. Under-floor distribution relies upon the natural flow of cool air introduced at occupied level and rising as it picks up heat from people, computers, and lights. As it rises to return registers near the ceiling, it also collects contaminants and odors and exhausts them above head level. This results in better indoor air quality.

The "displacement" system (cool air displaces hot air as it rises) saves energy because the air is not as cold as an overhead distribution (full mix) system, the velocity of the air is lower, and the heat from equipment and lights never mixes with the air people breathe.

An under floor distribution system may also include an "access floor" through which cable, telecommunication and electrical conduits run. For commercial spaces that are remodeled frequently, the flexibility of relocating registers and outlets in the floor may have significant long term savings.

RADIANT HEATING

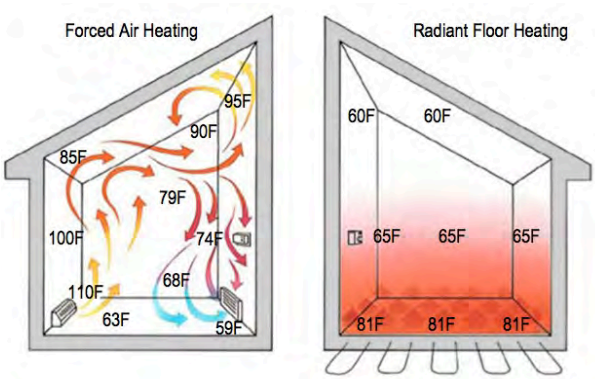

RADIANT HEATING & COOLING
Radiant temperature control relies upon the exchange of heat between a person's body and the surrounding surfaces. In a "radiant" system the temperature of the surrounding surfaces is what matters, not the actual air temperature.

Radiant floor heating systems are generally understood – warm water circulates in tubes through the floor slab; the floor feels warm to the touch, and it radiates warmth to the rest of our bodies. A solar thermal system can provide hot water as can a gas-fired water heater. With a radiant heating system there is no "instant hot;" it takes a while to heat the floor.

Radiant cooling uses the same principle as radiant heating, but in radiant cooling the body radiates its heat to cooler surrounding surfaces. An underground parking structure often feels cool even on hot days because the concrete surface temperature is below the temperature of our skin.

Radiant cooling relies on water circulating through the floor, walls and or ceiling to cool those surfaces. The advantages are improved comfort (no hot-cold cycling or cold air blasts), reduced fan motor size, and no compressor motors. Overall, there are savings from lower energy usage. But the systems are unconventional and require an experienced team to design the system properly.

The Energy Code requires a minimum R-value for flooring for insulation of radiant floors.

CONSIDER DIFFERENT METHODS OF COOLING AND HEATING